Polo 1995 ➤

4CV fuel injection and ignition system

Engine ID	AFK	AHW						

Edition 10.1999

Protected by copyright. Copying for private or commercial purposes, in part or in whole, is not permitted unless authorised by Volkswagen AG. Volkswagen AG does not guarantee or accept any liability with respect to the correctness of information in this document. Copyright by Volkswagen AG.
satelettronica

List of Workshop Manual Repair GroupsList of Workshop Manual Repair GroupsList of Workshop Manual Repair Groups

Polo 1995 ➤

4CV fuel injection and ignition system

Repair Group

01 - Self-diagnosis

24 - Mixture preparation, Injection

28 - Ignition system

Protected by copyright. Copying for private or commercial purposes, in part or in whole, is not permitted unless authorised by Volkswagen AG. Volkswagen AG does not guarantee or accept any liability with respect to the correctness of information in this document. Copyright by Volkswagen AG.

satelettronica

Technical information should always be available to the foremen and mechanics, because their careful and constant adherence to the instructions is essential to ensure vehicle road-worthiness and safety. In addition, the normal basic safety precautions for working on motor vehicles must, as a matter of course, be observed.

All rights reserved.
No reproduction without prior agreement from publisher.

Copyright © 2010 Volkswagen AG, Wolfsburg

K0050208420

Contents

01 - Self-diagnosis 1
1 General to self-diagnosis 1
1.1 General to self-diagnosis 1
1.2 Features of self-diagnosis 1
1.3 Technical data of self-diagnosis 1
1.4 Connecting fault reader V.A.G 1551 and selecting engine electronics control unit 2
1.5 Connecting Vehicle Diagnosis, Testing and Information system VAS 5051 and selecting engine electronics control unit 5
2 Fault memory 7
2.1 Fault memory 7
2.2 Interrogating and erasing fault memory of engine control unit 8
2.3 Automatic test sequence 9
3 Fault table, fault codes 00263...00524 10
3.1 Fault table, fault codes 00263...00524 10
4 Fault table, fault codes 00525...17978 15
4.1 Fault table, fault codes 00525...17978 15
5 Final control diagnosis 21
5.1 Final control diagnosis 21
5.2 Performing final control diagnosis 21
6 Measured value blocks 27
6.1 Measured value blocks 27
6.2 Safety precautions 27
6.3 Read measured value block 27
6.4 Evaluating measured value blocks 29

24 - Mixture preparation, Injection 38
1 Servicing injection system 38
1.1 Servicing injection system 38
1.2 Fitting locations overview 38
1.3 General notes on injection 41
1.4 Removing and installing parts of the injection system 43
1.5 Dismantling and assembling intake manifold 53
1.6 Dismantling and assembling fuel rail with injectors 56
1.7 Dismantling and assembling air cleaner 59
1.8 Safety precautions 62
1.9 Rules for cleanliness 63
1.10 Technical data 64
2 Checking components 64
2.1 Checking components 64
2.2 Checking Lambda probe heating 64
2.3 Checking throttle valve control part 66
2.4 Checking intake manifold pressure sender 74
2.5 Checking intake air temperature sender 77
2.6 Checking coolant temperature sender 81
2.7 Checking engine speed sender 86
2.8 Checking injectors 87
2.9 Checking fuel pressure regulator and holding pressure 94
2.10 Checking intake air system for leaks (unmetered air) 98
2.11 Checking intake air preheating 99
3 Checking functions 99
3.1 Checking functions 99
3.2 Checking Lambda probe and Lambda control 99
3.3 Checking engine operating mode 102

Protected by copyright. Copyright by Volkswagen AG. Volkswagen AG does not guarantee or accept any liability with respect to the correctness of information in this document. Copying for private or commercial purposes, in part or in whole, is not permitted unless authorised by Volkswagen AG.
satelettronica

4 Engine control unit . . . 104
4.1 Engine control unit . . . 104
4.2 Checking control unit voltage supply . . . 104
4.3 Replacing engine control unit . . . 106
4.4 Coding engine control unit . . . 107
4.5 Adapting engine control unit to throttle valve control part . . . 108
4.6 Adapting engine control unit to electronic immobilizer . . . 109

5 Checking additional signals . . . 111
5.1 Checking additional signals . . . 111
5.2 Checking speed signal . . . 111
5.3 Checking signal from/to air conditioning system . . . 112
5.4 Checking driving range signal . . . 114
5.5 Checking rpm signal . . . 115
5.6 Checking gearbox intervention signal when a gear is shifted . . . 115
5.7 Checking data bus . . . 117

28 - Ignition system . . . 119

1 Servicing ignition system . . . 119
1.1 Servicing ignition system . . . 119
1.2 General notes on ignition system . . . 119
1.3 Removing and installing parts of the ignition system . . . 120
1.4 Safety precautions . . . 122
1.5 Test data, spark plugs . . . 123
1.6 Checking Hall sender . . . 124
1.7 Checking ignition transformer . . . 125
1.8 Checking knock sensor . . . 129

Protected by copyright. Copying for private or commercial purposes, in whole or in part, is not permitted unless authorised by Volkswagen AG. Volkswagen AG does not guarantee or accept any liability with respect to the correctness of information in this document. Copyright by Volkswagen AG.
satelettronica

01 - Self-diagnosis

1 - General to self-diagnosis

1.1 - General to self-diagnosis

Note:

The self-diagnosis monitors only a part of the injection and ignition system. For fault finding the binder "Fault finding engine" must also be used in every case.

1.2 - Features of self-diagnosis

The 4CV injection and ignition system control unit (J448) is equipped with a fault memory.

If faults occur in the sensors and components being monitored, they will be stored in the fault memory together with an indication of the type of fault.

After evaluating the information, the engine control unit decides among different faults => Fault table Page 15 and stores these until the contents of the fault memory is erased.

Faults which only occur sporadically will have the addendum "sporadic fault" on the print out. These faults will be indicated on the display by the addendum "/SP". The cause of sporadic faults can be e.g. a loose contact or a brief open circuit. If a sporadic fault does not occur again within 40 warm-up phases (engine start below 50° C coolant temperature - switched off above 72° C), it will be erased from the fault memory.

The faults stored can be read-out with the fault reader V.A.G 1551, the vehicle system tester V.A.G 1552 or the new tester VAS 5051 => Page 8 .

The fault memory must be erased after the faults have been rectified => Page 8 .

Note:

General information for self-diagnosis can be found in the instruction manuals for the fault reader V.A.G 1551, vehicle system tester V.A.G 1552 or the new tester VAS 5051.

1.3 - Technical data of self-diagnosis

Control unit identification

The control unit version is displayed when the fault reader V.A.G 1551, the vehicle system tester V.A.G 1552 or the new tester VAS 5051 is connected and engine electronics control unit selected => Page 2 .

Technical data

Engine code	AFK	AHW
System designation	MARELLI 4CV	MARELLI 4CV
Exhaust emissions fulfil	MVEG II	MVEG II
Self-diagnosis	yes	yes
Final control diagnosis	yes	yes
Operating mode of data transfer to V.A.G 1551/1552	Rapid data transfer	Rapid data transfer

satelettronica

Engine code	AFK	AHW
Fault memory	Non-volat. mem.1)	Non-volat. mem.1)
Memory for learnt values	Volatile memory2)	Volatile memory2)
Lambda control	yes	yes
Knock control	1 knock sensor	1 knock sensor
Twin path intake manifold	no	no
Variable valve timing	no	no
Charge pressure control	no	no
Secondary air system	no	no
Exhaust gas recirculation	no	yes

1) Independent of voltage supply.

2) Values are erased when voltage supply is interrupted.

Selectable functions when using fault reader V.A.G 1551 or V.A.G 1552

Note:

The prerequisites for selecting the desired functions can be determined from the following table.

Function		Prerequisite		
Functions on fault reader V.A.G 1551 or on system tester V.A.G 1552		Engine stopped, ignition switched on	Engine running at idling speed	Vehicle being driven
01	Interrogate control unit version	yes	yes	yes
02	Interrogate fault memory	yes1)	yes	yes
03	Final control diagnosis	yes	no	no
04	Basic setting2)	yes	no	no
05	Erase fault memory	yes	yes	yes
06	End output	yes	yes	yes
07	Code control unit	yes	no	no
08	Read measured value block	yes	yes	yes

1) Only carry out with ignition switched on, when engine does not start.

2) Must be carried out after the following: Replacing engine control unit, throttle valve control part, engine or disconnecting battery.

1.4 - Connecting fault reader V.A.G 1551 and selecting engine electronics control unit

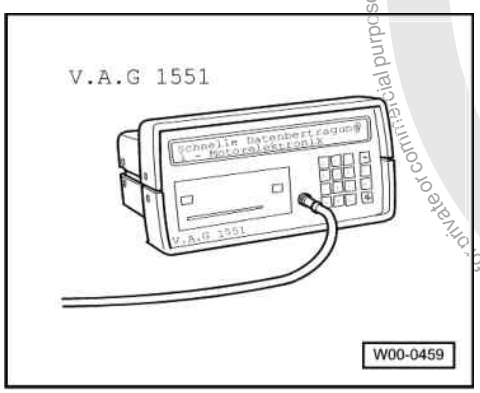

Protected by copyright. Copying for private or commercial purposes, in part or in whole, is not permitted unless authorised by Volkswagen AG. Volkswagen AG does not guarantee or accept any liability with respect to the correctness of information in this document. Copyright by Volkswagen AG.
satelettronica

Special tools, workshop equipment, testers, measuring instruments and auxiliary items required

- V.A.G 1551 Fault reader

Note:

The vehicle system tester V.A.G 1552 can be used instead of the fault reader V.A.G 1551, however a print-out is not possible.

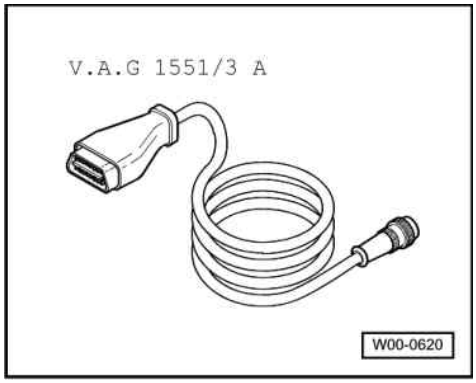

- V.A.G 1551/3A Cable

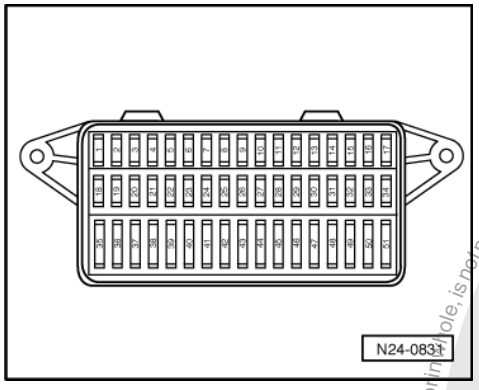

Test conditions

- -> The fuses No. 1, 3, 27, 30, 31, 32, 34, 37 and 40 must be OK.
- The battery voltage must be at least 11.5 V.
- Earth connection between engine (on gearbox bell housing) and body (below battery) OK.
- Earth connection in plenum chamber OK.

Work sequence

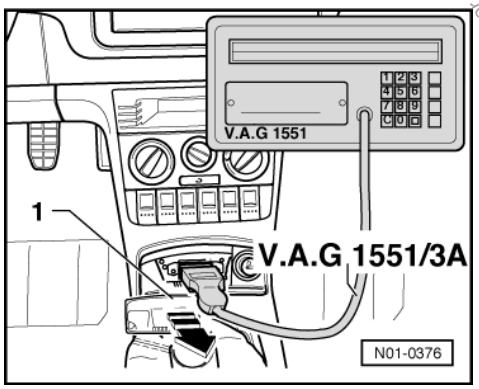

- -> Pull out ashtray -1-.

Protected by copyright. Copying for private or commercial purposes, in part or in whole, is not permitted unless authorised by Volkswagen AG. Volkswagen AG does not guarantee or accept any liability with respect to the correctness of information in this document. Copyright by Volkswagen AG.
satelettronica

- Connect fault reader V.A.G 1551 or vehicle system tester V.A.G 1552 with cable V.A.G 1551/3A.

After the fault reader has been connected:

- Depending on the desired function, switch on ignition
  or
  start engine and run at idling speed. Selectable functions => Page 2 .

Notes:

- If the display remains blank, check voltage supply for diagnostic connection according to fault finding programme:

=> Current flow diagrams, Electrical fault finding and Fitting locations

- If the display does not indicate as described in the work sequence:

=> Fault reader operating instructions

- If due to an input fault "Fault in the data transfer!" is displayed, pull wire off fault reader, reconnect and repeat work step.

- Operate fault reader taking into account the information on the display:

-> Indicated on display:

```
V.A.G - SELF DIAGNOSIS     HELP
     1 - Rapid data transfer*
     2 - Flash code output*
```

* Appears alternately

- Operate fault reader taking into account the information on the display:
- Press key 1 for "Rapid data transfer".
- Press keys 0 and 1 for address word "Engine electronics" and confirm entry with Q key.

-> The control unit identification and the coding will appear on the display, e.g.:

```
036 906014AN
```

- 036 906014AN = Part No. of the control unit (for latest control unit version see parts film)
- MARELLI 4CV = System designation
- 2331 = Programme level number
- Coding xxxxx = Control unit coding, coding variants of engine control unit => Page 107 , coding engine control unit.
- WSC xxxxx = Workshop code from V.A.G 1551, of the workshop who carried out the last coding. (If the factory coding has not been changed, WSC 00000 appears)

Note:

Replace control unit if the control version displayed does not correspond to the vehicle

=> Page 106 .

An incorrectly coded engine control unit leads to:

- Engine running faults (gear change jerks, load change jerks, etc.)
- Increased fuel consumption
- Increased exhaust gas emissions
- Faults stored in fault memory which are not actually present
- Functions will not be performed (Lambda regulation, activation of the activated charcoal filter system, etc.).
- Reduced gearbox life

- Press ⇒key.

-> Indicated on display:

Protected by copyright. Copying for private or commercial purposes, in part or in whole, is not permitted unless authorised by Volkswagen AG. Volkswagen AG does not guarantee or accept any liability with respect to the correctness of information in this document. Copyright by Volkswagen AG.

satelettronica

```
Rapid data transfer      HELP
Select function XX
```

- Further measures see repair procedures.

1.5 - Connecting Vehicle Diagnosis, Testing and Information system VAS 5051 and selecting engine electronics control unit

All functions which could be done with V.A.G 1551/1552 can also be done with the new tester VAS 5051 in the operating mode: "vehicle self-diagnosis":

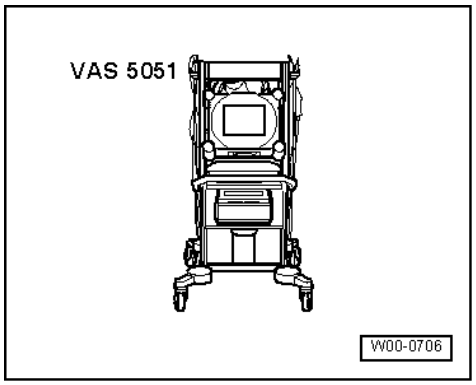

=> Operating instructions for Vehicle Diagnosis, Testing and Information System VAS 5051.

Special tools, workshop equipment, testers, measuring instruments and auxiliary items required

- VAS 5051 Vehicle Diagnosis, Testing and Information System

Test conditions

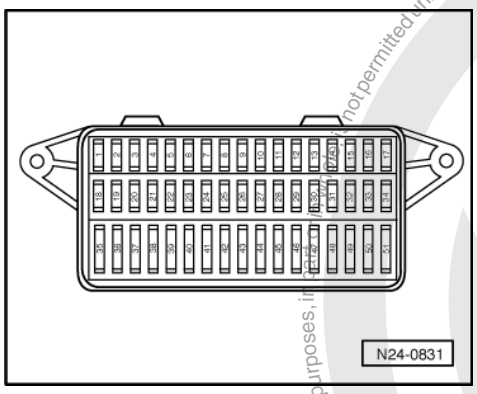

- -> The fuses No. 1, 3, 27, 30, 31, 32, 34, 37 and 40 must be OK.
- The battery voltage must be at least 11.5 V.
- Earth connection between engine (on gearbox bell housing) and body (below battery) OK.
- Earth connection in plenum chamber OK.

Work sequence

- Connect tester VAS 5051 with diagnosis cable VAS 5051/1 or VAS 5051/3 as follows:

Protected by copyright. Copyright by Volkswagen AG.
Copyright by Volkswagen AG. Volkswagen AG does not guarantee or accept any liability with respect to the correctness of information in this document. Copying for private or commercial purposes, in part or in whole, is not permitted unless authorised by Volkswagen AG.
satelettronica

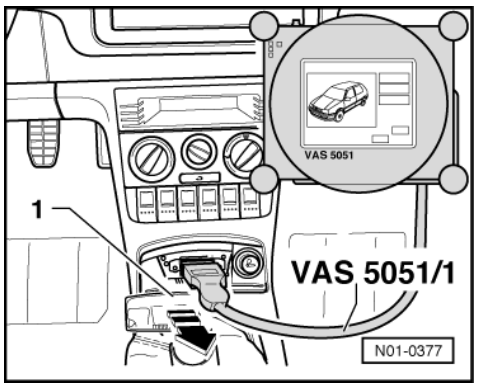

- -> Pull out ashtray -1-.
- Fit diagnosis cable connector onto diagnosis connector.
- Depending on the desired function, switch on ignition
  or
  start engine and run at idling speed. Selectable functions => Page 2 .

Note:

- The display fields will be displayed from top to bottom in functions 04 - Basic settings or 08 - Read data block.

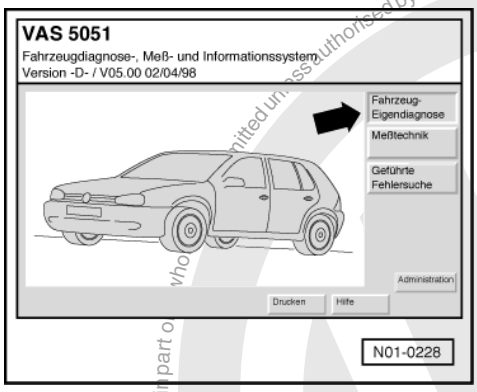

- If the display does not indicate as described in the work sequence:

=> Operating instructions for Vehicle Diagnosis, Testing and Information System VAS 5051.

-> Indicated on display:

Selecting operating mode:

- Press the button on the display for "Vehicle self-diagnosis" -arrow-.

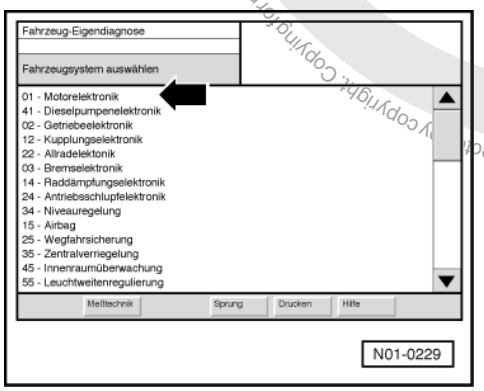

Protected by copyright. Copying for private or commercial purposes, in part or whole, is not permitted unless authorised by Volkswagen AG. Volkswagen AG does not guarantee or accept any liability with respect to the correctness of information in this document. Copyright by Volkswagen AG.
satelettronica

-> Indicated on display:

Selecting vehicle system:

- Press "01 - Engine electronics" on display -arrow-.

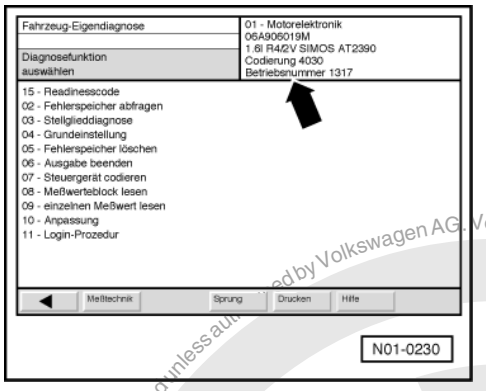

-> The control unit identification and coding -arrow- is shown on display e.g.:

Note:

Replace control unit if the control version displayed does not correspond to the vehicle

=> Page 106 .

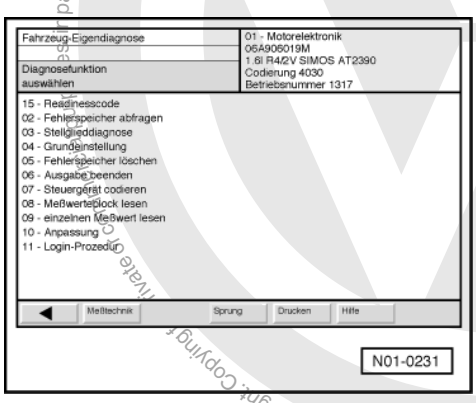

-> Indicated on display:

Selecting diagnosis function:

At this point all diagnosis functions are available.

- Press desired function on display.
- Further measures see repair procedures.

2 - Fault memory

2.1 - Fault memory

Interrogate fault memory of all control units
=> Page 9 , Automatic test sequence

Protected by copyright. Copyright by Volkswagen AG. Volkswagen AG does not guarantee or accept any liability with respect to the correctness of information in this document. Copyright by Volkswagen AG. Reproduction in whole or in part is not permitted unless authorized by Volkswagen AG.
satelettronica

2.2 - Interrogating and erasing fault memory of engine control unit

Special tools, workshop equipment, testers, measuring instruments and auxiliary items required

- Fault reader V.A.G 1551 or vehicle system tester V.A.G 1552 with cable V.A.G 1551/3A

Work sequence

Note:

All functions which could previously be performed with V.A.G 1551/1552 can also be performed with the new tester VAS 5051.

- Connect fault reader V.A.G 1551 (V.A.G 1552). Start engine and select "Address word" 01 of engine control unit. When doing this the engine must be running at idling speed.
  (Connecting fault reader and selecting engine control unit => Page 2 .)

Only when engine does not start:

- Operate starter for approx. 6 seconds and then do not switch off the ignition.

- Switch on fault reader printer with the print key. The warning lamp in key must light up.

-> Indicated on display:

```
Rapid data transfer      HELP
Select function XX
```

- Operate fault reader taking into account the information on the display:
- Press keys 0 and 2 for function "Interrogate fault memory" and confirm entry with Q key.

-> The number of faults stored or "No fault recognised!" will be shown on the display.

```
X Faults recognised!
```

If no fault is stored:

- Press ⇒key.

If one or more faults are stored:

The stored faults will be displayed and printed out one after the other.

-> After the stored faults have been printed out, the display will show:

```
Rapid data transfer      HELP
Select function XX
```

- Press keys 0 and 5 for the function "Erase fault memory" and confirm entry with Q key.

-> Indicated on display:

```
Rapid data transfer
Fault memory is erased!
```

Note:

If the ignition is switched off between "Interrogate fault memory" and "Erase fault memory" the fault memory will not be erased.

- Press ⇒key.

-> Indicated on display:

```
Rapid data transfer      HELP
Select function XX
```

Protected by copyright. Copying for private or commercial purposes, in part or in whole, is not permitted unless authorised by Volkswagen AG. Volkswagen AG does not guarantee or accept any liability with respect to the correctness of information in this document. Copyright by Volkswagen AG.
satelettronica

- Press keys 0 and 6 for the function "End output" and confirm entry with the Q key.

-> Indicated on display:

```
Rapid data transfer      HELP
Enter address word XX
```

- Switch off ignition.
- Rectify the faults printed out using the fault table:
  Fault code 00263...00524 => Page 15 .

2.3 - Automatic test sequence

During test and assembly work faults can be recognised from other control units like e.g. plug disconnected. Therefore, on completion, the fault memories of all control units must be interrogated and erased. To do this:

- Press key 0 twice for address word "Automatic test sequence" and confirm entry with Q key. The V.A.G 1551 transmits all known address words one after the other.

When a control unit answers with its identification the number of stored faults appears on the display or "No fault recognised".

Any system faults that are stored will be displayed one after the other and printed out. The V.A.G 1551 will then transmit the next address word.

-> The automatic test sequence has ended when following is indicated on display:

```
Rapid data transfer      HELP
Enter address word XX
```

- Erase all fault memories and then carry out a road test.

  During the road test the following operating conditions must be fulfilled:
  - The coolant temperature must exceed 80 °C .
  - When the temperature is reached, the operating conditions
    Idling
    Part throttle
    Full throttle
    Overrun
    must be attained several times.
  - At full throttle the speed must exceed 3500 rpm.

- Again interrogate the fault memories of all control units using the "automatic test sequence".

If no fault is stored:

- Press the ⇒key.

-> Indicated on display:

```
Rapid data transfer      HELP
Select function XX
```

- Press keys 0 and 6 for the function "End output" and confirm entry with the Q key.

-> Indicated on display:

```
Rapid data transfer      HELP
Enter address word XX
```

- Switch off ignition.

Protected by copyright. Copying for private or commercial purposes, part or in whole, is not permitted unless authorised by Volkswagen AG. Volkswagen AG does not guarantee or accept any liability with respect to the correctness of information in this document. Copyright by Volkswagen AG.
satelettronica

Note:

If the self-diagnosis has not detected a fault, use the appropriate fault table in "Fault finding engine" binder for further fault finding.

3 - Fault table, fault codes 00263...00524

3.1 - Fault table, fault codes 00263...00524

Notes:

- The fault tables are listed according to the 5 digit fault code on the left.
- Explanation of the fault types (e.g. "open circuit/short circuit to earth"):

=> Fault reader operating instructions

- If components are indicated as faulty:
  First check the wiring and connectors to these components as well as the system earth connections according to current flow diagram. This is particularly relevant if faults are output as "occurring sporadically" (SP).

V.A.G 1551 print out, e.g.:

00523 030

Intake air temperature sender -G42

Short to earth

Sporadically occurring fault

Explanation:

- 00523 = Fault code
- 030 = Fault type as number
- Intake air temperature sender -G42 = Faulty current path or incorrect location
- Short to earth = Fault type as text
- Sporadic faults = Faults that are not always present e.g. loose contact

V.A.G 1551 print-out	Possible causes of fault	Possible effects	Fault remedy
00263 Gearbox Signal too large	- Short to earth in wiring from engine control unit to automatic gearbox control unit	- See Workshop Manual automatic gearbox: => Self-diagnosis for automatic gearbox 001; Repair group 01; Performing self-diagnosis; fault table Performing self-diagnosis; fault table	- Interrogate fault memory of automatic gearbox control unit: => Self-diagnosis for automatic gearbox 001; Repair group 01; Performing self-diagnosis; Interrogating fault memory Performing self-diagnosis; Interrogating fault memory
	- Engine control unit input signal defective (engine control unit defective)		- Replace engine control unit =>Page 106 .

V.A.G 1551 print-out	Possible causes of fault	Possible effects	Fault remedy
00281 Road speed sender -G68			

Volkswagen AG. Volkswagen AG does not guarantee or accept any liability with respect to the correctness of information in this document. Copyright by Volkswagen AG. Protected by copyright. Copying for private, commercial purposes, in part or on whole, is not permitted unless authorised by Volkswagen AG.
satelettronica

V.A.G 1551 print-out	Possible causes of fault	Possible effects	Fault remedy
Implausible signal	- No signal from speedometer (G21) or speedometer sender (G22) - Wiring open circuit - Loose contact or corrosion due to moisture in connector	- Speedometer not functioning	- Check speed signal =>Page 111

V.A.G 1551 print-out	Possible causes of fault	Possible effects	Fault remedy
00282 Throttle valve positioner -V601) Short to earth	- Wiring short to earth - -V60 defective/sticking in closed position	- Cold starting problems - Cold idling problems - Load change jolt when decelerating - Mechanical emergency running - Idling problems	- Check V60 =>Page 66 , Checking throttle valve control part
Short to positive	- Wiring short to positive - -V60 defective/sticking in open position		
Output open	- Wiring open circuit - -V60 defective		
	- Engine control unit signal output defective (engine control unit defective)		- Replace engine control unit =>Page 106 .

1) The throttle valve positioner (V60) is a component of the throttle valve control part (J338).

V.A.G 1551 print-out	Possible causes of fault	Possible effects	Fault remedy
00305 Fuel consumption indicator signal Short to positive	- Short to positive in wiring between engine control unit and on-board computer	- No fuel consumption indicator in on-board computer	Check signal for fuel consumption indicator => Current flow diagrams, Electrical fault finding and Fitting locations binder
Short to earth	- Short to earth in wiring between engine control unit and on-board computer		

V.A.G 1551 print-out	Possible causes of fault	Possible effects	Fault remedy
00513 Engine speed sender -G28 No signal	- Signal wire has an open circuit or short to earth or short to positive - Earth wire has open circuit or short to positive - Open circuit in the screening from -G28 - -G28 defective - Metal particles on engine speed sender -G28 - Gap between -G28/sender wheel too large	- The engine revs only to a speed of approx. 4500 rpm) - Reduced performance - When cold the engine will not start or is difficult to start (cold starting problems) - The engine will not start when hot or is difficult to start (hot starting problems)	- Check G28 =>Page 86

Copyright by Volkswagen AG. Volkswagen AG does not guarantee or accept any liability with respect to the correctness of information in this document. Copyright by Volkswagen AG. Copying for private or commercial purposes, in whole or in part, is not permitted unless authorised by Volkswagen AG.
satelettronica

V.A.G 1551 print-out	Possible causes of fault	Possible effects	Fault remedy
Continued on next page			

V.A.G 1551 print-out	Possible causes of fault	Possible effects	Fault remedy
00513 Engine speed sender -G28 No signal	- Sender wheel loose	- Engine misfiring	- Check sender wheel: => Repair group 13; Removing and installing cylinder block, sealing flange and flywheel/ drive plate
	- Engine control unit signal output defective (engine control unit defective)		- Replace engine control unit =>Page 106 .

Notes on fault code 00513:

- Metal particles can cause additional signals to be generated.
- Signals may not be generated or be too small and therefore not recognised if the sender gap to sender wheel is too large or the sender wheel is damaged.
- The signals can be irregular if the sender wheel is loose.
- Interference signals can cause additional signals to be recognised.

V.A.G 1551 print-out	Possible causes of fault	Possible effects	Fault remedy
00515 Hall sender -G40 Open circuit/short to positive	- Wiring open circuit or short to positive - -G40 defective	- Engine has no power at full throttle - Emission values not OK - Higher fuel consumption - Engine does not start or is difficult to start when cold (cold starting problems)	- Check G40 =>Page 124
Short to earth	- Short to earth - -G40 defective		
Implausible signal	- Loose contact or corrosion due to moisture in connector - -G40 defective		

V.A.G 1551 print-out	Possible causes of fault	Possible effects	Fault remedy
00516 Idling switch -F601) Implausible signal	- Loose contact or corrosion due to moisture in connector - F60 defective	- Idling problems - Engine running problems when driving off - Load change jolt when decelerating	- Adapt engine control unit to the throttle valve control part =>Page 66 , checking throttle valve control part
	- Throttle valve sticking - Accelerator cable adjustment - Floor mat pressing on accelerator pedal		- Check accelerator cable adjustment: => Repair group 20; Accelerator mechanism; Adjusting accelerator cable Adjusting accelerator cable
	- Engine control unit input signal defective (engine control unit defective)		- Replace engine control unit =>Page 106 .

1) The idling speed switch (F60) is a component of the throttle valve control part (J338).

Protected by copyright. Copying for private or commercial purposes, in part or in whole, is not permitted unless authorised by Volkswagen AG. Volkswagen AG does not guarantee or accept any liability with respect to the correctness of information in this document. Copyright by Volkswagen AG.
satelettronica

V.A.G 1551 print-out	Possible causes of fault	Possible effects	Fault remedy
00518 Throttle valve potentiometer -G691) Short to earth	- Wiring short to earth - -G69 defective	- Slight misfiring when accelerating - Load change jolt when decelerating - Increased emission values - No full throttle recognition	- Adapt engine control unit to throttle valve control part =>Page 66 , checking throttle valve control part
Open circuit/short to positive	- Wiring open circuit or short to positive - -G69 defective		
Continued on next page			

2) The throttle valve potentiometer (G69) is a component of the throttle valve control part (J338).

V.A.G 1551 print-out	Possible causes of fault	Possible effects	Fault remedy
00518 Continued Throttle valve potentiometer -G691) No signal	- Signal wire has open circuit or short to earth or short to positive - Earth wire has open circuit or short to positive - -G69 defective	- Slight misfiring when accelerating - Load change jolt when decelerating - Increased emission values - No full throttle recognition	- Adapt engine control unit to throttle valve control part =>Page 66 , checking throttle valve control part

2) The throttle valve potentiometer (G69) is a component of the throttle valve control part (J338).

V.A.G 1551 print-out	Possible causes of fault	Possible effects	Fault remedy
00519 Intake manifold pressure sender -G71 Short to positive	- Wiring short to positive - -G71 defective	- Increased emission values - Load change jolt when decelerating - Hard load change	- Check G71 =>Page 74
Open circuit/short to earth	- Wiring open or short circuit to earth - -G71 defective		
Implausible signal	- Loose contact or corrosion due to moisture in connector - -G71 defective		

V.A.G 1551 print-out	Possible causes of fault	Possible effects	Fault remedy
00522 Coolant temperature sender -G62 Short to earth	- Wiring short to earth - -G62 defective	- Poor cold starting - Poor hot starting - No idling speed adaption - Increased emission values - Increased fuel consumption	- Check G62 =>Page 81

satelettronica

V.A.G 1551 print-out	Possible causes of fault	Possible effects	Fault remedy
Open circuit/short to positive	- Wiring open circuit or short to positive - -G62 defective		

V.A.G 1551 print-out	Possible causes of fault	Possible effects	Fault remedy
00523 Intake air temperature sender - G42 Short to earth	- Wiring short to earth - -G42 defective	- Poor hot starting - Increased emission values - Poor acceleration when cold and during warm-up phase, progression problems - Rough idling or no idling when cold or during the warm-up phase	- Check G42 =>Page 77
Open circuit/short to positive	- Wiring open circuit or short to positive - -G42 defective		

V.A.G 1551 print-out	Possible causes of fault	Possible effects	Fault remedy
00524 Knock sensor 1 -G61 Short to earth	- Wiring short to earth - -G61 defective	- Reduced power - Increased fuel consumption	- Check G61 => Page 129
Short to positive	- Wiring short to positive - -G61 defective		
Open circuit	- Wiring open circuit - -G61 defective		
Signal too small	- Wiring open circuit or short to earth - -G61 defective		
Continued on next page			

V.A.G 1551 print-out	Possible causes of fault	Possible effects	Fault remedy
00524 Continued Knock sensor 1 -G61 Implausible signal	- Knock sensor loose - Wiring open circuit or short to positive or short to earth or to signal wire screening between knock sensor and engine control unit - Loose contact or corrosion due to moisture in connector - Loose assemblies, causing the knock sensor to recognise additional signals (vibrations) - -G61 defective	- Reduced power - Increased fuel consumption	- Check G61 => Page 129

Protected by copyright. Copying for private or commercial purposes, in part or on one, is not permitted unless authorised by Volkswagen AG. Volkswagen AG does not guarantee or accept any liability with respect to the correctness of information in this document. Copyright by Volkswagen AG.
satelettronica

4 - Fault table, fault codes 00525...17978

4.1 - Fault table, fault codes 00525...17978

Notes on fault table =>Page 10

V.A.G 1551 print-out	Possible causes of fault	Possible effects	Fault remedy
00525 Lambda probe -G39 Short to positive	- Wiring short to positive - -G39 defective	- No Lambda control - Rough idling - Increased fuel consumption - Spark plugs sooted - Increased emission values	- Check Lambda probe and Lambda control =>Page 99
Signal too small	- Wiring short to earth - -G39 defective		
Signal too large	- -G39 defective		

V.A.G 1551 print-out	Possible causes of fault	Possible effects	Fault remedy
00530 Throttle valve positioner/potentiometer -G881) Open circuit/short to positive	- Wiring open circuit or short to positive - -G88 defective	- Cold starting problems - Cold idling problems - Idling speed not within tolerance - Rough idling - Load change jolt when decelerating	- Adapt engine control unit to throttle valve control part =>Page 66 , checking throttle valve control part
Short to earth	- Wiring short to earth - -G88 defective		

1) The throttle valve positioner/potentiometer (G88) is a component of the throttle valve control part (J338).

V.A.G 1551 print-out	Possible causes of fault	Possible effects	Fault remedy
00532 Supply voltage Signal too large	- Voltage supply above - 16 V (alternator defective) - Excessive voltage caused by jump starting	- Engine control unit damaged	- Check alternator: => Current flow diagrams, Electrical fault finding and Fitting locations binder
Signal too small	- Voltage supply less than 10 V - Engine control unit has poor earth connection - Battery discharged - Current draw when ignition is off	- Idling speed not in specified range	- Check engine control unit voltage supply => Page 104 Check charge state of battery
		- Engine control unit learnt values are lost	- Adapt engine control unit to throttle valve control part => Page 108 .

Note to fault code 00532:

- If the fault is indicated as a sporadic fault, ignore the fault information! This fault can be stored when the engine is running for a long time at idling with lots of electrical consumers switched on and the battery is heavily discharged.
- The fault type "Signal too small" will be stored 60 seconds after starting if the voltage supply drops below 10.08 V for longer than 2 seconds (the control unit will not function below 6.0 V).

Protected by copyright. Copying for private or commercial purposes, in any form, not permitted unless authorised by Volkswagen AG. Volkswagen AG does not guarantee or accept any liability with respect to the correctness of information in this document. Copyright by Volkswagen AG.
satelettronica

- Voltage supply is not checked when starting engine.

V.A.G 1551 print-out	Possible causes of fault	Possible effects	Fault remedy
00543 Maximum revs exceeded Signal too large	Engine code AFK: - Speed was above 7300 rpm (missed gear) Engine code AHW: - Speed was above 6600 rpm (missed gear)	- Possible damage to valves and pistons (contact)	- Check engine for damage and erase fault memory => Page 8 , interrogating and erasing fault memory

V.A.G 1551 print-out	Possible causes of fault	Possible effects	Fault remedy
00609 Ignition output 1 Short to positive	- Wiring short to positive - -G152 defective	- Engine will not start	- Check ignition transformer =>Page 125
Short to earth	- Wiring short to earth - -G152 defective		
Output open	- Wiring open circuit - -G152 defective		
	- Engine control unit signal output defective (engine control unit defective)		- Replace engine control unit =>Page 106 .

V.A.G 1551 print-out	Possible causes of fault	Possible effects	Fault remedy
00610 Ignition output 2 Short to positive	see fault code 00609, ignition output 1, relating to ignition output 2		
Short to earth			
Output open			

Note on fault codes 00609 and 00610:

Ignition outputs 1 and 2 are the outputs on the engine control unit via which the engine control unit activates the ignition transformer.

V.A.G 1551 print-out	Possible causes of fault	Possible effects	Fault remedy
00638 Engine/gearbox electrical connection 2 Short to positive	- Short to positive in the wiring from engine control unit to automatic gearbox control unit	- See Workshop Manual automatic gearbox: => Automatic gearbox 001 self-diagnosis; Repair group 01; Performing self-diagnosis; fault table Performing self-diagnosis; fault table	- Interrogate automatic gearbox control unit fault memory: => Automatic gearbox 001 self-diagnosis; Repair group 01; Performing self-diagnosis; Interrogating fault memory Performing self-diagnosis; Interrogating fault memory
Short to earth	- Short to earth in the wiring from engine control unit to automatic gearbox control unit		

V.A.G 1551 print-out	Possible causes of fault	Possible effects	Fault remedy
00653			

Protected by copyright. Copying for private or commercial purposes, in part or in whole, is not permitted unless authorised by Volkswagen AG. Volkswagen AG does not guarantee or accept any liability with respect to the correctness of information.
Copyright by Volkswagen AG.
satelettronica

V.A.G 1551 print-out	Possible causes of fault	Possible effects	Fault remedy
Plausibility selector lever/gearbox Implausible signal	- Wiring from engine control unit to automatic gearbox control unit - Loose contact or corrosion due to moisture in connector	- Engine running problems (gear shift jerk, load change jolt) - Idling speed not within tolerance range - Idling speed fluctuates	- Check driving range signal =>Page 114

Note on fault code 00653:

On vehicles with an automatic gearbox the engine control unit recognises whether a gear is engaged.

V.A.G 1551 print-out	Possible causes of fault	Possible effects	Fault remedy
00792 Air conditioning pressure switch -F129 Short to positive	- Wiring short to positive - -F129 defective	- Air conditioning not functioning	- Check function of air conditioning: => Heating, air conditioning; Repair group 87; Air conditioning Air conditioning - Interrogate fault memory of air conditioning/heating electronics: => Heating, air conditioning; Repair group 01; Self-diagnosis of Climatronic; Interrogating fault memory 02 Self-diagnosis of Climatronic; Interrogating fault memory 02
Open circuit/short to earth	- Wiring open circuit or short to earth - -F129 defective		
Signal too small	- Wiring short to earth - -F129 defective		
Signal too large	- -F129 defective		

V.A.G 1551 print-out	Possible causes of fault	Possible effects	Fault remedy
01044 Control unit incorrectly coded	- Engine control unit or engine replaced - ABS control unit - replaced - Airbag control unit - replaced	- Engine running problems (gear shift jerk, load change jolt, etc.) - Increased fuel consumption - Increased emission values - A fault has been stored which does not exist - Functions not performed (Lambda control, activated charcoal filter system activation, etc.) - Reduced gearbox life	- Code engine control unit =>Page 107

V.A.G 1551 print-out	Possible causes of fault	Possible effects	Fault remedy
01087			

Protected by copyright. Copying for private or commercial purposes, in part or on whole, is not permitted unless authorised by Volkswagen AG. Volkswagen AG does not guarantee or accept any liability with respect to the correctness of information in this document. Copyright by Volkswagen AG.

satelettronica

Basic setting not carried out	- Throttle valve control part has been removed and installed - Throttle valve control part and/or engine control unit or engine have been replaced	- Idling speed not within tolerance range - Idling speed fluctuates - No full throttle recognition	- Adapt engine control unit to throttle valve control part => Page 66 , checking throttle valve control part
	- Adapting the engine control unit to the throttle valve control part was interrupted. The cause of this could be that e.g. the starter or the accelerator pedal was operated during the adaption procedure.		- Repeat the adaption of engine control unit to the throttle valve control part => Page 108 , adapting engine control unit to throttle valve control part

V.A.G 1551 print-out	Possible causes of fault	Possible effects	Fault remedy
01126 Engine speed signal Short to positive	- Wiring open circuit or short to positive		- Check engine speed signal=> Page 86
Short to earth	Wiring short to earth		

V.A.G 1551 print-out	Possible causes of fault	Possible effects	Fault remedy
01180 Engine/gearbox electrical connection Short to positive	- Short to positive in the wiring from engine control unit to air conditioner compressor	- Air conditioning system/A/C compressor does not function	- Check engine/air conditioner compressor electrical connection =>Page 21 , final control diagnosis
Short to earth	- Short to earth in the wiring from engine control unit to air conditioner compressor		
Output open	- Wiring open circuit between engine control unit and air conditioner compressor		
	- Engine control unit signal output defective (engine control unit defective)		- Replace engine control unit =>Page 106 .

V.A.G 1551 print-out	Possible causes of fault	Possible effects	Fault remedy
01247 Activated charcoal filter solenoid valve 1 -N80 Short to earth	- Wiring short to earth - -N80 defective	- Possible jerking in part throttle range - It is possible that the vehicle smells of fuel	- Check N80 => Page 21 , final control diagnosis
Short to positive	- Wiring short to positive - -N80 defective		
Output open	- Wiring open circuit - Supply voltage for N80 defective - -N80 defective		

satelettronica

	- Engine control unit signal output defective (engine control unit defective)		- Replace engine control unit =>Page 106 .

V.A.G 1551 print-out	Possible causes of fault	Possible effects	Fault remedy
01249 No.1 cyl. injector -N30 Short to positive	- Short to positive in the wiring between injector and engine control unit - Injector defective	- Engine runs rough/stalls - Increased emission values - Poor starting characteristics - Engine running problems - Poor acceleration - Rough idling	- Check injectors =>Page 87
Short to earth	- Short to earth in the wiring between injector and engine control unit - Injector defective		
Output open	- Voltage supply for injector defective		
	- Engine control unit signal output defective (engine control unit defective)		- Replace engine control unit =>Page 106 .

V.A.G 1551 print-out	Possible causes of fault	Possible effects	Fault remedy
01250 No. 2 cyl. injector -N31 Short to positive Short to earth Output open	see fault code 01249, No. 1 Cyl., but for N31		
01251 No. 3 cyl. injector -N32 Short to positive Short to earth Output open	see fault code 01249, No. 1 Cyl., but for N32		

V.A.G 1551 print-out	Possible causes of fault	Possible effects	Fault remedy
01252 No. 4 cyl. injector -N33 Short to positive Short to earth Output open	see fault code 01249, No. 1 Cyl., but for N33		

V.A.G 1551 print-out	Possible causes of fault	Possible effects	Fault remedy
01259 Fuel pump relay -J17 Short to positive	- Short to positive in the wiring between J17 and engine control unit - -J17 defective	- Engine starts briefly and then stalls again - Engine will not start	- Check -J17 =>Page 21 , final control diagnosis
Short to earth	- Short to earth in the wiring between J17 and engine control unit - J17 defective		
Output open	- Voltage supply for J17 defective		

Protected by copyright. Copyright by Volkswagen AG.
Copying for private or commercial purposes, in part or in whole, is not permitted unless authorised by Volkswagen AG. Volkswagen AG does not guarantee or accept any liability with respect to the correctness of information in this document.
satelettronica

V.A.G 1551 print-out	Possible causes of fault	Possible effects	Fault remedy
	- Engine control unit signal output defective (engine control unit defective)		- Replace engine control unit =>Page 106 .

Note on fault code 01259:

If the fault "01259" is stored the faults "01247, 01249...01252 could also be stored as these components are supplied with voltage via the fuel pump relay.

V.A.G 1551 print-out		Possible causes of fault	Possible effects	Fault remedy
01265 Exhaust gas recirculation valve - N18				
	Short to positive	- Short to positive in the wiring between N18 and engine control unit - -N18 defective	- No exhaust gas recirculation - Increased fuel consumption - Increased emission values	- Check N18 => Page 21 , final control diagnosis
	Short to earth	- Short to earth in the wiring between N8 and engine control unit - -N18 defective		
	Output open	- Voltage supply for N18 defective		
		- Engine control unit signal output defective (engine control unit defective)		- Replace engine control unit =>Page 106 .

V.A.G 1551 print-out	Possible causes of fault	Possible effects	Fault remedy
01312 Data bus drive defective	- Wiring open circuit or short to positive - Fault in data wires to airbag, dash panel insert or ABS control unit	- Engine running problems (gear shift jerk, load change jolt, etc.) - Increased fuel consumption - Increased emission values - A fault has been stored which does not exist - Functions not performed (Lambda control, activation of activated charcoal filter system, etc.) - Reduced gearbox life	- Check data bus wiring =>Page 117

V.A.G 1551 print-out	Possible causes of fault	Possible effects	Fault remedy
01316 Brake control unit no communication	- Wiring open circuit between engine control unit and ABS control unit - Signal wire of engine control unit and/or signal wire of ABS control unit defective - ABS control unit incorrectly coded		- Check data bus =>Page 117 Code ABS control unit: => Running gear self-diagnosis for ABS; Repair group 01; Performing self-diagnosis; Coding control unit

Protected by copyright. Copying for private or commercial purposes, in part or in whole, is not permitted unless authorised by Volkswagen AG. Volkswagen AG does not guarantee or accept any liability with respect to the correctness of information in this document. Copyright by Volkswagen AG.

satelettronica

V.A.G 1551 print-out	Possible causes of fault	Possible effects	Fault remedy
01317 Dash panel insert no communication	- Fault in data wires to dash panel insert control unit	- Combi-instrument does not indicate speed	- Check data bus =>Page 117
01321 Airbag no communication		- No crash fuel shut-off	- Check data bus =>Page 117

V.A.G 1551 print-out	Possible causes of fault	Possible effects	Fault remedy
17978 Engine control unit blocked	- Start attempted with an unauthorised key. - Attempted manipulation - Short in communication wire - Fault in immobilizer system - Immobilizer control unit defective/missing - Engine control unit has been replaced and not adapted to the immobilizer	- Engine starts briefly and then stops again	- Adapt engine control unit to electronic immobilizer => Page 109 Check electronic immobilizer: => Electrical system; Repair group 96; Servicing electronic immobilizer

Note to fault code 17978:

If starting is attempted with an unauthorised key a permanent fault will be stored. After a subsequent start with an authorised key the fault will be converted to a sporadic fault.

5 - Final control diagnosis

5.1 - Final control diagnosis

5.2 - Performing final control diagnosis

The final control diagnosis activates the following components in the stated sequence:

1. Throttle valve positioner (V60)
2. Activated charcoal filter solenoid valve 1 (N80)
3. Exhaust gas recirculation valve (N18)
   (only engine code AHW)
4. Engine speed signal1)
5. Fuel pump relay (J17)
6. Engine/air conditioner compressor electrical connection

   1) not relevant

Special tools, workshop equipment, testers, measuring instruments and auxiliary items required

- Fault reader V.A.G 1551 or vehicle system tester V.A.G 1552 with cable V.A.G 1551/3A
- Test box V.A.G 1598/22
- Hand multimeter V.A.G 1526 or multimeter V.A.G 1715

satelettronica

- Diode test lamp V.A.G 1527
- Adapter set V.A.G 1594
- Current flow diagram

Check conditions

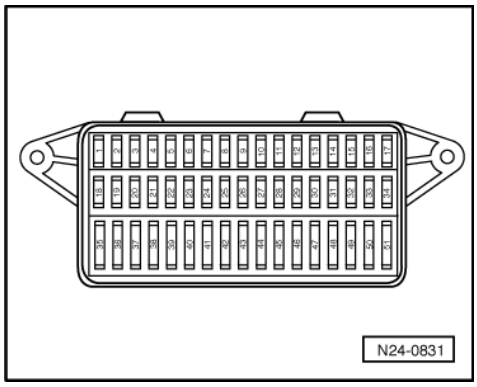

- -> The fuses No. 27, 28, 30, 31, 32, 37 and 39 must be OK.
- The battery voltage must be at least 11.5 V.
- All electrical consumers, e.g. lights and rear window heating must be switched off.
- Throttle valve potentiometer (G69) OK.

Test requirements for vehicles with air conditioning system

- Vehicle at room temperature (warmer than + 15 °C)
- Air conditioning system switched on
- Select lowest temperature and highest blower speed

Notes:

- The final control diagnosis can only be carried out if the engine is stationary and ignition switched on.
- The final control diagnosis will be aborted if the engine is started or a rotational impulse is recognised.
- During the final control diagnosis the individual final controls will be activated until advancing to the next final control by pressing the ⇒ button.
- The final controls are checked acoustically or by touching.

Work sequence

- Connect the fault reader V.A.G 1551 (V.A.G 1552). Then switch ignition on and select engine control unit with the "Address word" 01.
  (Connecting fault reader and selecting engine control unit => Page 2 .)

-> Indicated on display:

```
Rapid data transfer     HELP
Select function XX
```

- Operate fault reader taking into account the information on the display:
- Press keys 0 and 3 for the function "Final control diagnosis".

-> Indicated on display:

```
Rapid data transfer     Q
03 Final control diagnosis
```

Activating throttle valve positioner (V60):

- Confirm input with Q key.

-> Indicated on display:

```
Final control diagnosis
Throttle valve positioner-V60
```

Protected by copyright. Copying for private or commercial purposes, in part or in whole, is not permitted unless authorised by Volkswagen AG. Volkswagen AG does not guarantee or accept any liability with respect to the correctness of information in this document. Copyright by Volkswagen AG.
satelettronica

The throttle valve positioner must open and close the throttle valve until switching to the next final control by pressing the ⇒key.

If the throttle valve positioner does not move:

- Check throttle valve positioner
  =>Page 66 , checking throttle valve control part.

Activating activated charcoal filter solenoid valve 1 (N80):

- Press ⇒key.

-> Indicated on display:

```
Final control diagnosis
Activ. charcoal filter solenoid valve
1     -N80
```

The solenoid valve (right-hand suspension turret) must click, until activating the next final control element by pressing ⇒key.

- Pull hose off activated charcoal filter at solenoid valve.
- Connect an auxiliary hose to the vacant valve connection.
- Blow into auxiliary hose during final control diagnosis (in direction of throttle valve control part).
  Valve must open and close

If the solenoid valve does not click:

- Continue check => Page 24 .

Activating exhaust gas recirculation valve (N18):

(only engine code AHW)

- Press ⇒key.

-> Indicated on display:

```
Final control diagnosis
Exhaust gas recirculation valve -N18
```

The exhaust gas recirculation valve (engine compartment, left, on cylinder head) must click until the next final control is activated by pressing the ⇒key.

If the solenoid valve does not click:

- Continue check => Page 26 .

Continuation for all engines

Activating fuel pump relay (J17):

- Press ⇒key twice.

-> Indicated on display:

```
Final control diagnosis
Fuel pump relay J17
```

The fuel pump relay (on the relay plate) must click until the next final control is activated by pressing the ⇒key.

Note:

During the activation of the fuel pump relay the fuel pump must be heard to run at intervals.

Protected by copyright. Copying for private or commercial purposes, in part or in whole, is not permitted unless authorised by Volkswagen AG. Volkswagen AG does not guarantee or accept any liability with respect to the correctness of information in this document. Copyright by Volkswagen AG.

sateletronica

If the relay does not click:
- Check fuel pump relay:

=> Current flow diagrams, Electrical fault finding and Fitting locations

Checking electric wiring to air conditioner:

Note:

The test step is only for vehicles with air conditioner. On vehicles without air conditioner end final control diagnosis by pressing ⇒key.

-> Indicated on display:

```
Final control diagnosis
Engine/air cond. compr. electr.
connection
```

The air conditioner compressor magnetic coupling must click, until ending final control diagnosis by pressing ⇒key.

If the magnetic coupling does not click:
- Check wiring from / to air conditioner
  =>Page 112

If the magnetic coupling clicks:
- Press ⇒key.

-> Indicated on display:

```
Rapid data transfer      HELP
Select function XX
```

- Press keys 0 and 6 for the "End output" function and confirm input with the Q key.

-> Indicated on display:

```
Rapid data transfer      HELP
Enter address word XX
```

- Switch off ignition.

Continuation of check when the activated charcoal filter solenoid 1 does not click:

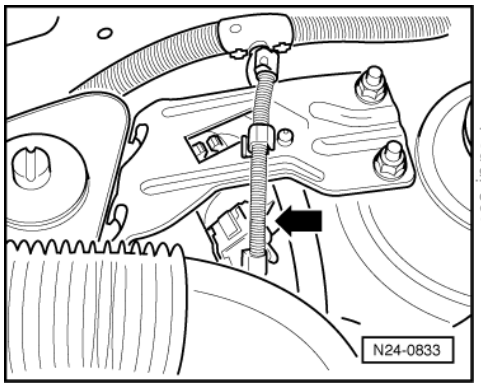

- -> Pull the 2 pin connector off solenoid valve 1 (N80) -arrow-.

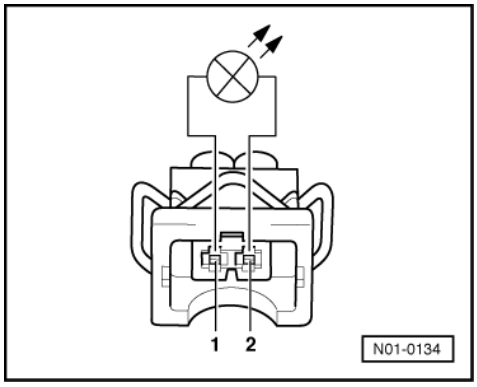

Protected by copyright. Copying for private or commercial purposes, in part or in whole, is not permitted unless authorised by Volkswagen AG. Volkswagen AG does not guarantee or accept any liability with respect to the correctness of information in this document. Copyright by Volkswagen AG.
satelettronica

Protected by copyright. Copying for private or commercial purposes, in part or in whole, is not permitted unless authorised by Volkswagen AG. Volkswagen AG does not guarantee or accept any liability with respect to the correctness of information in this document. Copyright by Volkswagen AG.

- -> Connect diode test lamp V.A.G 1527 using adapter cables from V.A.G 1594 to detached connector.
  The LED must flash (bright/darker)

LED flashes:

- Proceed with final control diagnosis until completed.
- Switch off ignition.
- Replace solenoid valve 1 (N80):

=> Repair group 20; Activated charcoal filter system; Removing and installing parts of activated charcoal filter system Activated charcoal filter system Removing and installing parts of activated charcoal filter system

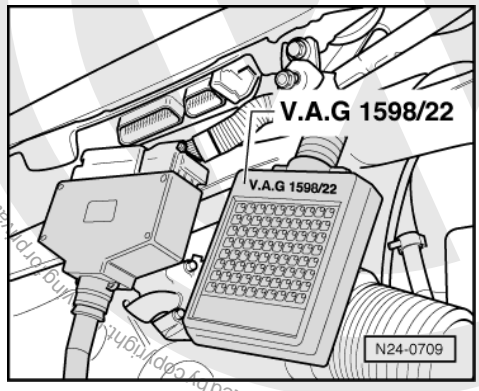

LED does not flash:

- Proceed with final control diagnosis until completed.
- Switch off ignition.
- -> Connect test box V.A.G 1598/22 to control unit wiring harness.

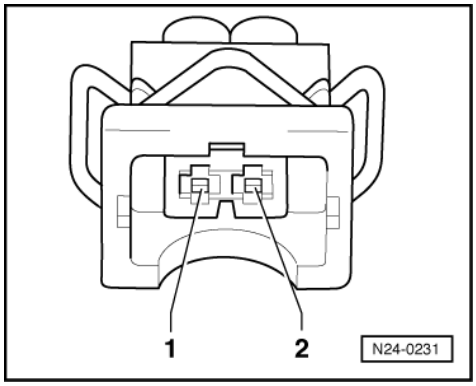

- -> Check wire for open circuit between test box sockets 15 and 2 pin connector contact 2 using current flow diagram.
  Wire resistance: max. 1.5 ω
- Additionally check wire for short to battery positive and earth.
  Specification: ∞ω
- Check wire between 2 pin connector contact 1 and the fuel pump relay (J17) for open circuit using current flow diagram.
  Wire resistance: max. 1.5 ω

If no wiring fault is detected:

satelettronica

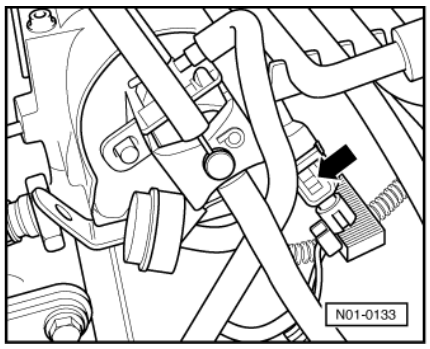

- Replace engine control unit
  => Page 106 .

Continuation of check when the exhaust gas recirculation valve does not click:

- -> Pull the 2 pin connector off exhaust gas recirculation valve (N18) -arrow- (on camshaft housing, left).

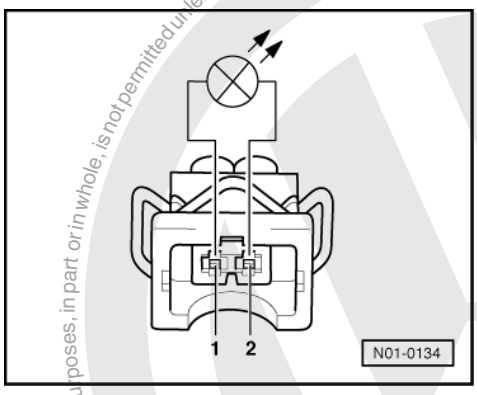

- -> Connect the diode test lamp V.A.G 1527 using adapter cables from V.A.G 1594 to detached connector. The LED must flash (bright/darker)

LED flashes:

- Proceed with final control diagnosis until completed.
- Switch off ignition.
- Replace the exhaust gas recirculation valve (N18):

=> Repair group 26; Exhaust gas recirculation system; Servicing parts of the exhaust gas recirculation system Exhaust gas recirculation system Servicing parts of the exhaust gas recirculation system

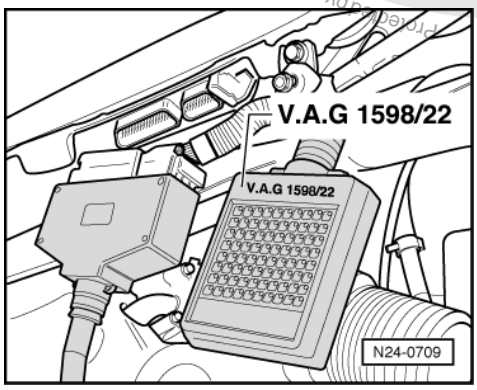

LED does not flash:

- Proceed with final control diagnosis until completed.
- Switch off ignition.

Protected by copyright. Copying for private or commercial purposes, in part or in whole, is not permitted unless authorised by Volkswagen AG. Volkswagen AG does not guarantee or accept any liability with respect to the correctness of information in this document. Copyright by Volkswagen AG.
satelettronica

- -> Connect test box V.A.G 1598/22 to control unit wiring harness.

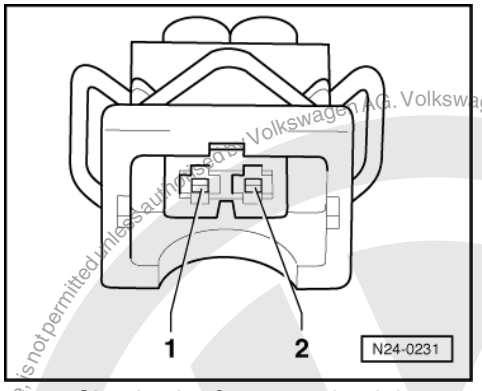

- -> Check wire for open circuit between test box socket 72 and 2 pin connector contact 2using current flow diagram.
  Wire resistance: max. 1.5 ω
- Additionally check wire for short to battery positive and earth.
  Specification: ∞ω
- Check wire between 2 pin connector contact 1 and the fuel pump relay (J17) for open circuit using current flow diagram.
  Wire resistance: max. 1.5 ω

If no wiring fault is detected:

- Replace engine control unit
  => Page 106 .

6 - Measured value blocks

6.1 - Measured value blocks

6.2 - Safety precautions

Observe following if test and measuring instruments are required during a test drive:

- Test and measuring instruments must be secured to rear seat and operated by a 2nd person from this location.

  If test and measuring instruments are operated from front passenger's seat and the vehicle is involved in an accident, there is a possibility that the person sitting in this seat may receive serious injuries when the airbag is triggered.

6.3 - Read measured value block

The measured values in the functions read measured value block and basic setting are described during the individual component test. This table serves only as an overview.

Special tools, workshop equipment, testers, measuring instruments and auxiliary items required

- Fault reader V.A.G 1551 or vehicle system tester V.A.G 1552 with cable V.A.G 1551/3A

Protected by copyright. Copying for private or commercial purposes, in part or in whole, is not permitted unless authorised by Volkswagen AG. Volkswagen AG does not guarantee or accept any liability with respect to the correctness of information in this document. Copyright by Volkswagen AG.
satelettronica

Test conditions

- All electrical consumers, e.g. lights and rear window heating must be switched off.
- If the vehicle is equipped with an air conditioner, this must be switched off.
- On vehicles with automatic gearbox the selector lever must be in "P" or "N" position.
- No faults must be stored in fault memory => Page 8 , interrogating and erasing fault memory.
- Coolant temperature must be at least 80 °C, =>display group 1, display zone 2.

Work sequence

- Connect fault reader V.A.G 1551 (V.A.G 1552). Start engine and select "Address word" 01 of engine control unit. When doing this the engine must be running at idling speed.
  (Connecting fault reader and selecting engine control unit => Page 2 .)

-> Indicated on display:

```
Rapid data transfer      HELP
Select function XX
```

- Press keys 0 and 8 for the function "Read measured value block" and confirm entry with Q key.

-> Indicated on display:

```
Read measured value block      HELP
Input display group number XXX
```

- Select required display group number.

Note:

The display group number 1 is an example, to illustrate the sequence.

- Press keys 0, 0 and 1 for "Display group number 1" and confirm entry with Q key.

-> Indicated on display:
(1...4 = Display zones)

```
Read measured value block      1
     1     2     3     4
```

Note:

To change to another display group proceed as follows:

Display group	V.A.G 1551	V.A.G 1552
Higher	Press key 3	Press ↑key
Lower	Press key 1	Press ↓key
Skip	Press key C	Press key C

- If the specifications in all display zones are obtained, press ⇒key.

-> Indicated on display:

```
Rapid data transfer      HELP
Select function XX
```

- Press keys 0 and 6 for the "End output" function and confirm input with the Q key.

-> Indicated on display:

```
Rapid data transfer      HELP
Enter address word XX
```

- Switch off ignition.

Protected by copyright. Copyright of private or commercial purposes, in part or whole, is not permitted unless authorised by Volkswagen AG. Volkswagen AG does not guarantee or accept any liability with respect to the correctness of information in this document. Copyright by Volkswagen AG.
satelettronica

Note:

Measured value blocks which are not described in this chapter are currently only intended for the research and development and production. The values displayed are not relevant for service department fault finding.

6.4 - Evaluating measured value blocks

Display group 1 -Basic functions-						
Read measured value block 1			⇒	[Itrif] Indicated on display		
xxxx rpm	xxx °C	x.xxx V	xxxxxxxx			
1	2	3	4	[Itrif] Display zones	Specification	Evaluation
				Adjustment conditions	00000000	=> Page 31
			Lambda probe voltage		0.000...1.000 V	=> Page 30
		Coolant temperature			85...110 °C	=> Page 30
	Engine speed (idling speed) Engine code AFK Engine code AHW with manual gearbox Engine code AHW with automatic gearbox				790...890 rpm1) 800...900 rpm1) 630...730 rpm1)	=> Page 29

1) Up-to-date specifications:

=> Exhaust emissions test binder

Note on display zone 1:

The idling speed will be increased by the control unit under the following conditions:

- When the battery voltage is too low: up by approx. 150 rpm.
- After a long full throttle drive and high temperatures: up by approx. 125 rpm.
- After starting the engine when intake air temperature is above 75 °C or coolant temperature is above 105 ° C: up by approx. 70 rpm.
- The idling speed is raised to 750 rpm at selected driving range.
- With air conditioner switched on, the idling speed is raised to 890 rpm (engine code AFK) or 800 rpm (engine code AHW).

Note on display zone 1:

As soon as a fault is stored in the fault memory which affects the intake air temperature sender (G42), the engine control unit will use a replacement value of 80 °C for the temperature value.

Notes on display zone 3:

- The voltage signal "rich mixture (low level of residual oxygen)" is approx. 0.700...1.000 V.
- The voltage signal "lean mixture (high level of residual oxygen)" is approx. 0.000...0.300 V.
- When changing from "rich" to "lean" and back again (font=symbol charset=fontspecific code=108 TeX='\lambda ' descr='[lambda]' = 1.0) the voltage jump will change from 0.700...1.000 V to 0.000...0.300 V or back again.
- Due to the steep voltage jumps the Lambda control cannot keep the ideal mixture composition font=symbol charset=fontspecific code=108 TeX='\lambda ' descr='[lambda]' = 1.0 constant. The control fluctuates constantly between conditions "slightly too lean" and "slightly too rich".
- The displayed value must temporarily drop below 0.300 V and exceed 0.600 V. Displayed values below 0.450 V signifies lean, above 0.450 V rich.

Evaluating display group 1, display zone 1 - Engine speed (idling speed)

Appears on display	Possible fault cause	Fault elimination
Lower than specification	- Throttle valve control part sticking or defective	- Check throttle valve control part => Page 66
Higher than specification	- Idling switch not closed/defective	- Interrogate fault memory, => Page 8 , interrogating and erasing fault memory

Volkswagen AG. Volkswagen AG does not guarantee or accept any liability with respect to the correctness of this document. Copyright by Volkswagen AG. Protected by copyright. Copying for private or commercial purposes, in part or in whole, is not permitted unless authorised by Volkswagen AG.
satelettronica

	- Large amount of unmetered air (cannot be compensated for by the idling stabilisation) - Throttle valve control part sticking/defective	- Check intake air system for leaks => Page 98 - Check throttle valve control part => Page 66

Evaluating display group 1, display zone 2 - Coolant temperature

Appears on display	Possible fault cause	Fault elimination
Less than 80 °C	- Engine too cold - Coolant temperature sender or wiring to engine control unit	- If necessary carry out test drive - Check coolant temperature sender =>Page 81
More than 110 °C	- Radiator soiled - Radiator fan not functioning - Thermostat defective - Coolant temperature sender or wiring to engine control unit	- Clean radiator - Check function - Check thermostat => Repair group 19; Removing and installing parts of cooling system; Parts of cooling system engine side Parts of cooling system engine side - Check coolant temperature sender =>Page 81

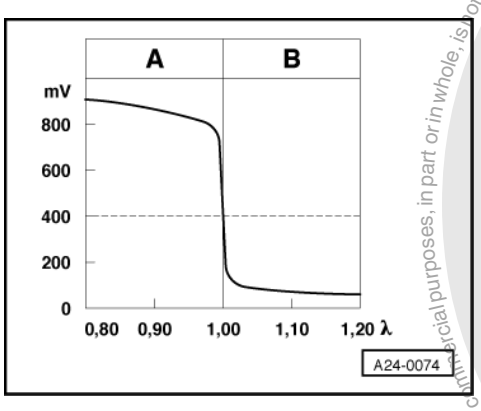

-> Lambda probe voltage Ufont=symbol charset=fontspecific code=108 TeX='\lambda ' descr='[lambda]' in mV

A: High Lambda probe voltage

- Rich mixture (excess of fuel or shortage of air)
- Higher CO value

B: Low Lambda probe voltage

- Lean mixture (shortage of fuel or excess air)
- Lower CO value

Evaluating display group 1, display zone 3 - Lambda probe voltage

Appears on display	Possible fault cause	Fault elimination
Display does not fluctuate (Constant 0.000... 0.300 V or Constant 0.700...1.000 V) Cont. on next page	- Large amount of unmetered air - Spark plug defective - Fuel pressure too low or too high	- Check air intake system for leaks =>Page 98 - Check spark plugs - Check fuel pressure regulator and holding pressure => Page 94

Appears on display	Possible fault cause	Fault elimination

Protected by copyright. Copying for private or commercial purposes, in part or in whole, is not permitted unless authorised by Volkswagen AG. Volkswagen AG does not guarantee or accept any liability with respect to the correctness of information in this document. Copyright by Volkswagen AG.
satelettronica

Continued	- Injector defective - Coolant temperature sender defective - Activated charcoal filter solenoid valve 1 - Lambda probe heating not functioning - Lambda probe (s) defective or soiled	- Check injectors => Page 87 - Check coolant temperature sender =>Page 81 - Check solenoid valve 1 =>Page 21 , final control diagnosis - Check Lambda probe heating => Page 64 - Check Lambda probe and Lambda control => Page 99
Constant 1.200 V	- Short to positive via: - Lambda probe, probe wire, earth wire, engine control unit	- Check Lambda probe wiring => Page 99 , checking Lambda probe and Lambda control
Constant between 0.040...0.050 V	- Open circuit in: - Lambda probe, probe wire, earth wire, engine control unit	
Constant 0.000 V	- Short to earth via: - Lambda probe, probe wire, earth wire, engine control unit	

Significance of figures in 8 digit number block, display zone 4 - Adjustment conditions

								Signifies
X	X	X	X	X	X	X	X	Coolant temperature 0 = Coolant temperature above 80 °C 1 = Coolant temperature below 80 °C
								Engine speed 0 = Engine speed below 1800 rpm 1 = Engine speed above 1800 rpm
								Throttle valve 0 = Throttle valve closed 1 = Throttle valve open
								Lambda control 0 = Lambda control OK. 1 = Fault in the Lambda control
								Idling switch (F60) 0 = Idling switch closed 1 = Idling switch open
								Air conditioner compressor 0 = Air conditioner compressor switched off 1 = Air conditioner compressor switched on

Protected by copyright. Copying for private or commercial purposes, in part or in whole, is not permitted unless authorised by Volkswagen AG. Volkswagen AG does not guarantee or accept any liability with respect to the correctness of information in this document. Copyright by Volkswagen AG.
satelettronica

	Gearbox intervention during gear shift 0 = No intervention 1 = Intervention
Fault memory 0 = No fault stored in fault memory 1 = Fault stored in fault memory	

Note on 2nd position in 8 digit number block:

Because the signal is very short, the command to retard the ignition timing is not always recognised by the fault reader V.A.G. 1551 or the vehicle system tester V.A.G 1552. Check gearbox intervention signal when a gear is selected=>Page 115 .

Note on 4th and 6th position in 8 digit number block:

If a 1 is displayed here the fault can be that the accelerator cable is too taut.

Note on 5th position in 8 digit number block:

All faults will not be recognised by the self-diagnosis. If a 1 is shown here you must check the Lambda probe and Lambda control even if no fault is stored in the fault memory=>Page 99 .

Display group 2 -Basic functions-						
Read measured value block 2			⇒	[Itrif] Indicated on display		
xxxx rpm	xx.xx ms	xx.x V	xxx °C			
1	2	3	4	[Itrif] Display zones	Specification	Evaluation
				Intake air temperature	15...70°C	---
				Supply voltage for engine control unit	12...14.5 V	=> Page 33
				Injection period (per Otto cycle) Engine code AFK Engine code AHW	2.00...5.00 ms 2.40...6.00 ms	=> Page 32
				Engine speed (idling speed) Engine code AFK Engine code AHW with manual gearbox Engine code AHW with automatic gearbox	790...890 rpm1) 800...900 rpm1) 630...730 rpm1)	=> Page 29

1) Up-to-date specifications:

=> Exhaust emissions test binder

Note on display zone 1:

The idling speed will be increased by the control unit under the following conditions:

- When the battery voltage is too low: up by approx. 150 rpm.
- After a long full throttle drive and high temperatures: up by approx. 125 rpm.
- After starting the engine when intake air temperature is above 75 °C or coolant temperature is above 105 ° C: up by approx. 70 rpm.
- The idling speed is raised to 750 rpm at selected driving range.
- With air conditioner switched on, the idling speed is raised to 890 rpm (engine code AFK) or 800 rpm (engine code AHW).

Note on display zone 4:

As soon as a fault is stored in the fault memory which affects the intake air temperature sender (G42), the engine control unit will use a replacement value of 45 °C for the temperature value.

Evaluating display group 2, display zone 2 - Injection period (per Otto cycle)

Appears on display	Possible fault cause	Fault elimination

Protected by copyright. Copyright by Volkswagen AG. Copyright by Volkswagen AG. does not guarantee or accept any liability with respect to the correctness of information in this document. Copyright by Volkswagen AG. Not permitted unless authorised by Volkswagen AG. Not for commercial purposes or passing on to third parties.
satelettronica

Lower than specification	- Large amount of fuel from the activated charcoal filter system - Incorrect injectors with greater throughput installed	- Check solenoid valve 1 => Page 21 , final control diagnosis - Check injectors => Page 87
Higher than specification	- Increased engine load due to electric consumers, air conditioner, gear selected or P.A.S. steering on full lock - Incorrect injectors with smaller throughput installed	- Eliminate increased load (air conditioner, power assisted steering etc.) - Check injectors => Page 87

Evaluating display group 2, display zone 3 - Control unit voltage supply

Appears on display	Possible fault cause	Fault elimination
Less than 12.0 V	- Alternator defective, battery charge state low - Battery heavily charged shortly after starting due to high charging current and current consumers - Transfer resistance in the current supply or the engine control unit earth connection - Current draw when ignition is off	- Check alternator and battery voltage, charge battery: => Electrical system: Repair group 27 - Increase revs slightly for a few minutes and switch off current consumers - Check engine control unit voltage supply => Page 104 - Eliminate current draw
More than 14.5 V	- Voltage regulator on alternator defective - Excess voltage due to jump starting or quick charging unit	- Check voltage regulator, replace if necessary: => Electrical system; Repair group 27 - Interrogate fault memory => Page 8 , interrogating and erasing fault memory

Display group 3 -Basic functions-

Read measured value block 3 ⇒				[Itrif] Indicated on display		
xxxx rpm	xxx %	xxx <°	xxx.x %			
1	2	3	4	[Itrif] Display zones	Specification	Evaluation
				Throttle valve positioner duty cycle	Not for Service department	---
				Throttle valve angle Engine code AFK Engine code AHW	0...4 <° 0...7 <°	=> Page 34
				Engine load Engine code AFK Engine code AHW	16...28 % 15...36 %	=> Page 34
				Engine speed (idling speed) Engine code AFK Engine code AHW with manual gearbox Engine code AHW with automatic gearbox	790...890 rpm1) 800...900 rpm1) 630...730 rpm1)	=> Page 29

1) Up-to-date specifications:

=> Exhaust emissions test binder

Note on display zone 1:

The idling speed will be increased by the control unit under the following conditions:

- When the battery voltage is too low: up by approx. 150 rpm.
- After a long full throttle drive and high temperatures: up by approx. 125 rpm.
- After starting the engine when intake air temperature is above 75 °C or coolant temperature is above 105 ° C: up by approx. 70 rpm.
- The idling speed is raised to 750 rpm at selected driving range.

Protected by copyright. Copyright by Volkswagen AG. Volkswagen AG does not guarantee or accept any liability with respect to the correctness of information in this document. Copyright by Volkswagen AG. Not to be republished, in whole or in part, without the express written permission of Volkswagen AG. Reproduced for educational purposes, in part or in whole, only with permission.
satelettronica

- With air conditioner switched on, the idling speed is raised to 890 rpm (engine code AFK) or 800 rpm (engine code AHW).

Notes on display zone 2:

- The maximum engine load decreases by about 10 % per 1000 m above sea level.
- The engine load also decreases by up to 10 % if the ambient temperatures are very high.

Evaluating display group 3, display zone 2 - Engine load

Appears on display	Possible fault cause	Fault elimination
Lower than specification	- Smaller values can occur when driving in overrun	---
Higher than specification	- Rough idling (not running on all cylinders)	- Check spark plugs Check injectors =>Page 87
	- Throttle valve control part defective	- Check throttle valve control part => Page 66
	- Electric consumers switched on	- Switch off electric consumers
	- Steering wheel at full lock	- Set steering wheel to centre position
	- Gear selected (automatic gearbox)	- Place selector lever in P or N

Evaluating display group 3, display zone 3 - Throttle valve angle

Appears on display	Possible fault cause	Fault elimination
Higher than specification	- Engine control unit not adapted to throttle valve control part	- Adapt engine control unit to throttle valve control part => Page 8 , interrogating and erasing fault memory
	- Throttle valve potentiometer in throttle valve control part defective	- Check throttle valve control part => Page 66
	- Accelerator cable adjustment	- Adjust accelerator cable: => Repair group 20; Accelerator mechanism; Adjusting accelerator cable Adjusting accelerator cable
	- Throttle valve sticking	- Eliminate cause

Note:

If the accelerator pedal is floored the value will be more than 75 <°.

Display group 4 -Engine operating condition-						
Read measured value block 4 ⇒				[Itrif] Indicated on display		
xxxx rpm	xxx %	xxx km/h	xxxxxxxx			
1	2	3	4	[Itrif] Display zones	Specification	Evaluation
				Engine operating condition	01000000	=> Page 35
			Road speed		0 km/h	---
		Engine load Engine code AFK Engine code AHW			16...28 % 15...36 %	=> Page 34
	Engine speed (idling speed) Engine code AFK Engine code AHW with manual gearbox Engine code AHW with automatic gearbox				790...890 rpm1) 800...900 rpm1) 630...730 rpm1)	=> Page 29

1) Up-to-date specifications:

=> Exhaust emissions test binder

satelettronica

Note on display zone 1:

The idling speed will be increased by the control unit under the following conditions:

- When the battery voltage is too low: up by approx. 125 rpm.
- After a long full throttle drive and high temperatures: up by approx. 125 rpm.
- After starting the engine when intake air temperature is above 75 °C or coolant temperature is above 105 ° C: up by approx.70 rpm.
- The idling speed is raised to 750 rpm at selected driving range.
- With air conditioner switched on, the idling speed is raised to 890 rpm (engine code AFK) or 800 rpm (engine code AHW).

Notes on display zone 2:

- The maximum engine load decreases by about 10 % per 1000 m above sea level.
- The engine load also decreases by up to 10 % if the ambient temperatures are very high.

Note on display zone 3:

Checking speed signal => Page 111

Note on display zone 4:

Checking engine operating condition => Page 102 .

Significance of figures in 8 digit number block, display zone 4 - Operating conditions

X	X	X	X	X	X	X	X	Signifies
								Not relevant
								Not relevant
								Not relevant
								Not relevant
								1 = Full throttle
								1 = Part throttle
								1 = Idling
								1 = Overrun

Display group 5 -Throttle valve control part operating conditions-

Read measured value block 5 ⇒ [Itrif] Indicated on display

xxxx rpm	xxx.x %	x.xx l/h	xxxxxxxx	[Itrif] Display zones	Specification	Evaluation
1	2	3	4			
				Throttle valve control part operating conditions	00000000	=> Page 36
			Fuel consumption Engine code AFK Engine code AHW		0.40...0.90 l/h 0.40...0.80 l/h	---
		Activated charcoal filter solenoid valve 1 duty cycle			0.0...19.0 %	---
	Engine speed (idling speed) Engine code AFK Engine code AHW with manual gearbox Engine code AHW with automatic gearbox				790...890 rpm1) 800...900 rpm1) 630...730 rpm1)	=> Page 29

1) Up-to-date specifications:

=> Exhaust emissions test binder

Protected by copyright. Copying for private or commercial purposes, in part or in whole, is not permitted unless authorised by Volkswagen AG. Volkswagen AG does not guarantee or accept any liability with respect to the correctness of information in this document. Copyright by Volkswagen AG.

satelettronica

Note on display zone 1:

The idling speed will be increased by the control unit under the following conditions:

- When the battery voltage is too low: up by 900 rpm.
- After a long full throttle drive and high temperatures: up by approx. 150 rpm.
- After starting the engine when intake air temperature is above 75 °C or coolant temperature is above 105 ° C: up by approx. 70 rpm.
- The idling speed is raised to 750 rpm at selected driving range.
- With air conditioner switched on, the idling speed is raised to 890 rpm (engine code AFK) or 800 rpm (engine code AHW).

Note on display zone 1:

Check activated charcoal filter solenoid valve 1 (N80) => Page 21 , final control diagnosis.

Notes on display zone 3:

- The specification is only valid for an idling speed which is not loaded due to ancillaries (e.g. automatic gearbox, air conditioning/heating, alternator, P.A.S. pump).
- ltr./100 km not suitable for fuel consumption measurement.

Note on display zone 4:

Check throttle valve control part => Page 66 .

Significance of figures in 8 digit number block, display zone 4 - Throttle valve control part operating conditions

X	X	X	X	X	X	X	X	Signifies
								Idling switch (F60), during basic setting 0 = Idling switch closed 1 = Idling switch open
								Voltage between throttle valve potentiometer (G69) and throttle valve positioner potentiometer (G88) 0 = Voltage within tolerance 1 = Voltage outside the tolerance
								Signal between throttle valve potentiometer (G69) and throttle valve positioner potentiometer (G88) 0 = Plausible signal 1 = Implausible signal
								Idling switch (F60), before the basic setting 0 = Idling switch closed 1 = Idling switch open
								Speed signal 0 = No speed signal recognised 1 = Speed signal recognised
								Battery voltage 0 = Battery voltage OK. 1 = Battery voltage too low
								Not relevant
								Not relevant

Display group 6 -Basic functions-						
Read measured value block 6 ⇒				[Itrif] Indicated on display		
xxx.x %	---	---	xxx <°			
1	2	3	4	[Itrif] Display zones	Specification	Evaluation
				Value stored for the throttle valve potentiometer position during the basic setting of the throttle valve control part: Throttle valve closed	Not for Service department	---
			Vacant		---	---

Protected by copyright. Copying for private or commercial purposes, in part or in whole, is not permitted unless authorised by Volkswagen AG. Volkswagen AG does not guarantee or accept any liability with respect to the correctness of information in this document. Copyright by Volkswagen AG.
satelettronica

	Vacant	---	---
	Mixture correction	Not for Service department	---

Display group 098 -Matching throttle valve control part-1)						
Read measured value block 98			⇒	[Itrif] Indicated on display		
x.xxx V	x.xxx V	Text	Text			
1	2	3	4	[Itrif] Display zones	Specification	Evaluation
				Adapting mode	ADP. is running or ADP. OK. or ADP ERROR	---
			Engine operating mode		Idling or part throttle	---
		Throttle valve positioner potentiometer voltage (G88)			0.500...5.000 V	---
	Throttle valve potentiometer voltage (G69)				0.500...5.000 V	---

1) Matching throttle valve control part to engine control unit => Page 108 .

Note on display group 98:

The throttle valve control part will be matched to the engine control unit when the display group 98 under function 04 "Basic setting" is selected. This matching must always be carried out when a different throttle valve control part (or other complete engine) or a different engine control unit is fitted.

If the voltage supply is interrupted (battery disconnected), adaption need not be performed.

Display group 125 -Communication -data bus messages-						
▪ Engine running at idling speed						
Read measured value block 125			⇒	[Itrif] Indicated on display		
Text1)	Text	Text2)				
1	2	3	4	[Itrif] Display zones	Specification	Evaluation
			Airbag status		Airbag 1	---
		Combi status			Combi 1	---
	ABS status				ABS 1	---

1) Only displayed when ABS is coded

2) Only displayed when airbag is coded

Note on display group 125:

If specification = 1, the display indicates that data bus is active.

satelettronica

24 - Mixture preparation, Injection

1 - Servicing injection system

1.1 - Servicing injection system

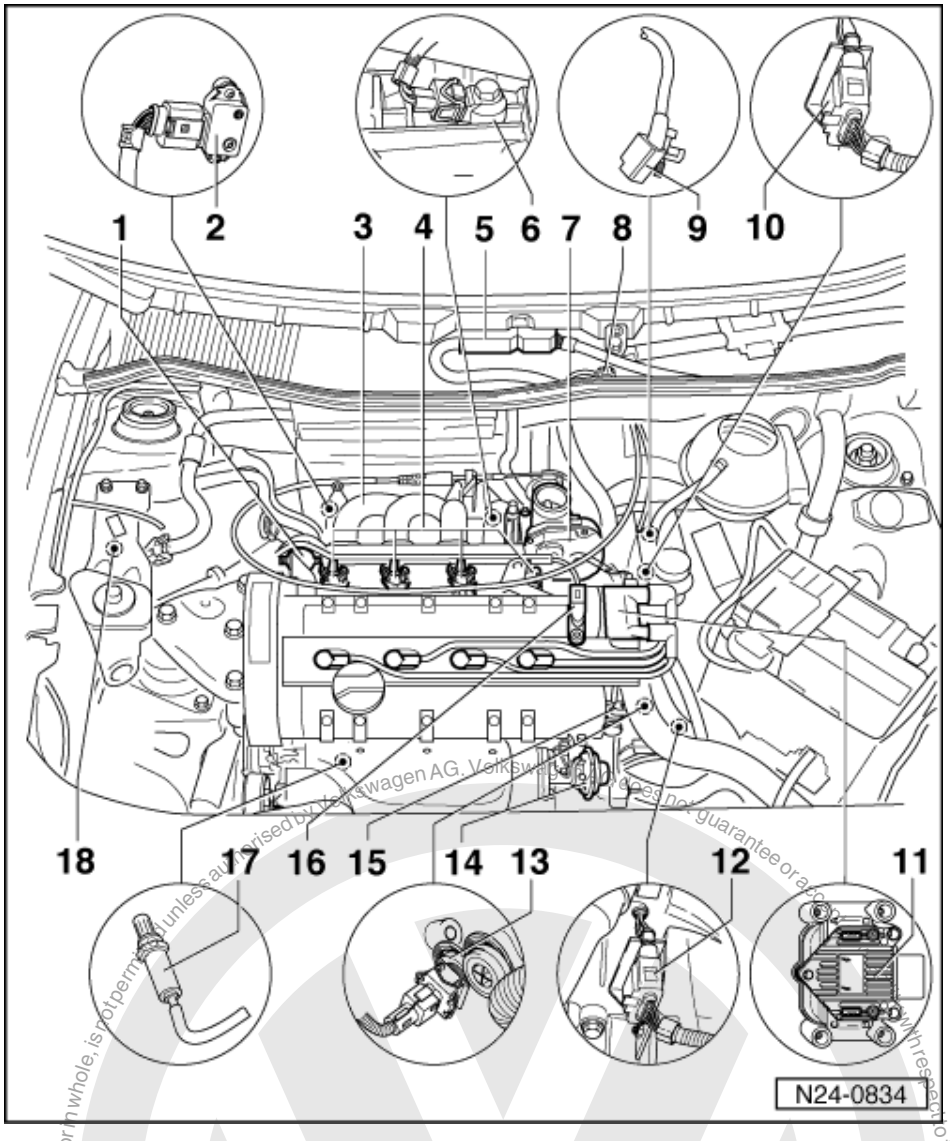

1.2 - Fitting locations overview

1 Fuel pressure regulator
2 Intake manifold pressure sender (G71)* with intake air temperature sender (G42)*
3 Intake manifold
4 Injectors (N30...N33)*
5 Engine control unit*
(Control unit for 4CV injection system-J448)
6 Knock sensor 1 (G61)*
- Fitting location: cylinder block intake side

satelettronica

- => Page 121 , item 6

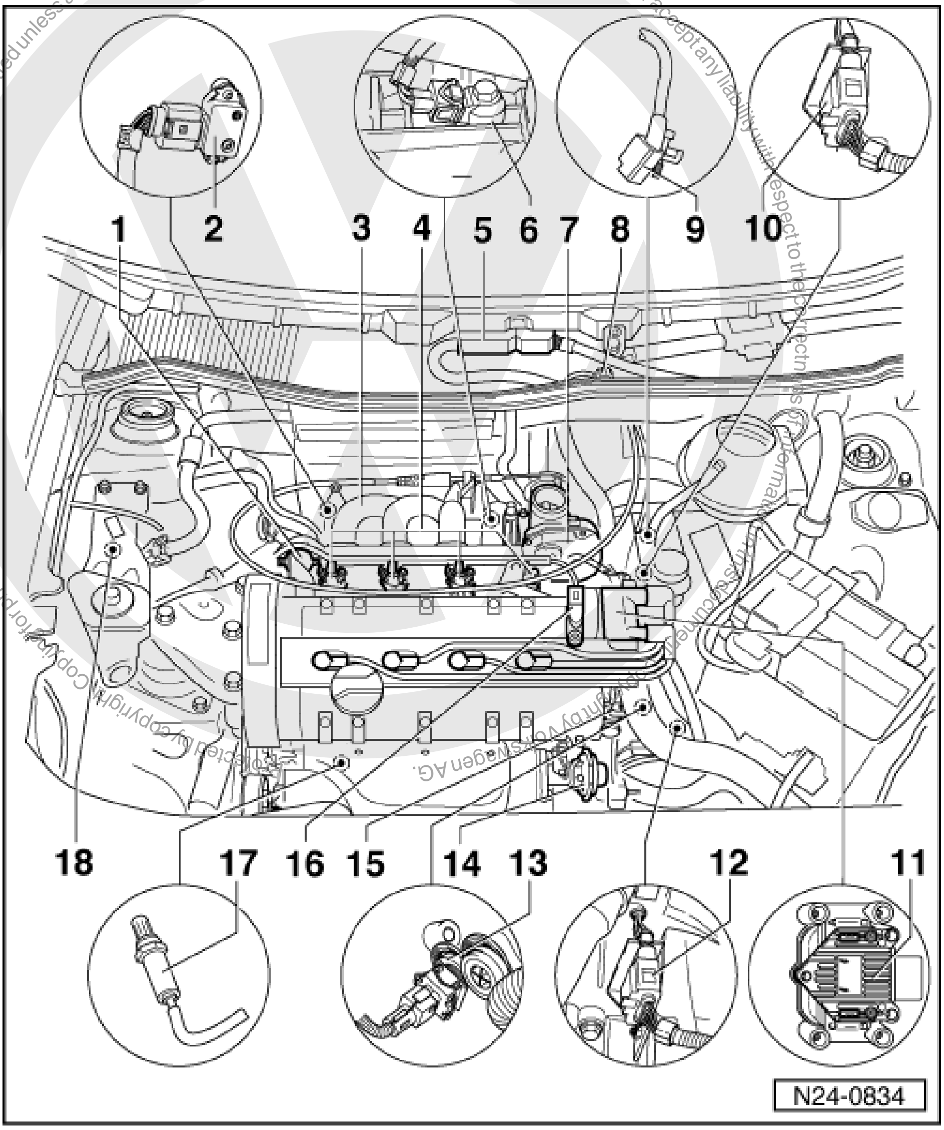

7 Throttle valve control part (J338)*

8 Earth connection

9 Engine speed sender (G28)*
- Fitting location: cylinder block intake side

10 3 pin connector
- Black
- For engine speed sender (G28)

11 Ignition transformer (N152)*
- With ignition cable identification, do not interchange
- => Page 120 , item 2

12 4 pin connector
- Black
- For Lambda probe and Lambda probe heating

Protected by copyright. Copying for private or commercial purposes, in part or in whole, is not permitted unless authorised by Volkswagen AG. Volkswagen AG does not guarantee or accept any liability with respect to the correctness of information in this document. Copyright by Volkswagen AG.

satelettronica

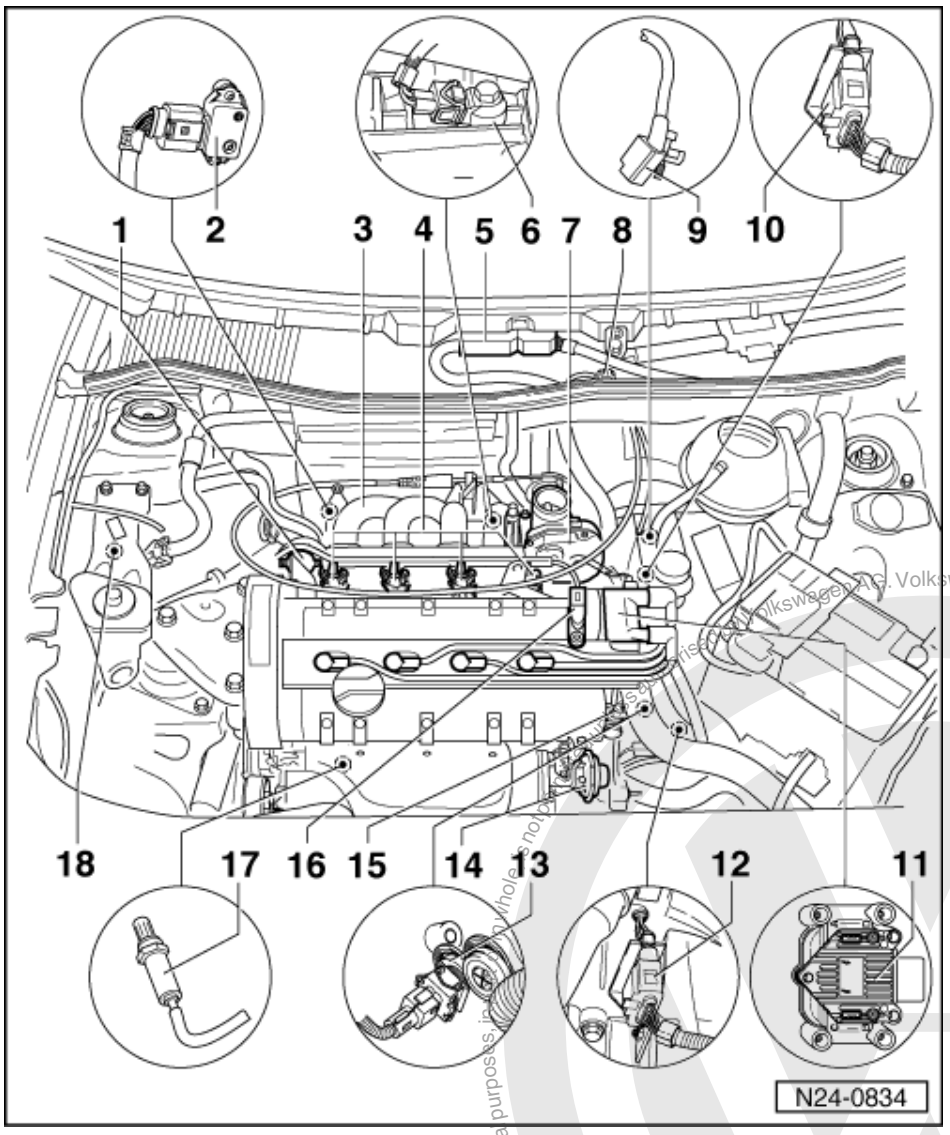

13 Coolant temperature sender (G62)*

- With coolant temperature gauge sender (G2)

14 Exhaust gas recirculation valve (mechanical)

- Only engine code AHW:

=> Repair group 26; Exhaust gas recirculation system; Servicing parts of the exhaust gas recirculation system Exhaust gas recirculation system Servicing parts of the exhaust gas recirculation system

15 Exhaust gas recirculation valve (N18)*/**

- Only engine code AHW:

=> Repair group 26; Exhaust gas recirculation system; Servicing parts of the exhaust gas recirculation system Exhaust gas recirculation system Servicing parts of the exhaust gas recirculation system

16 Hall sender (G40)*

- => Page 122 , item 9

Protected by copyright. Copyright by Volkswagen AG.
Volkswagen AG does not guarantee or accept any liability with respect to the correctness of information in this document. Copyright by Volkswagen AG.
satelettronica

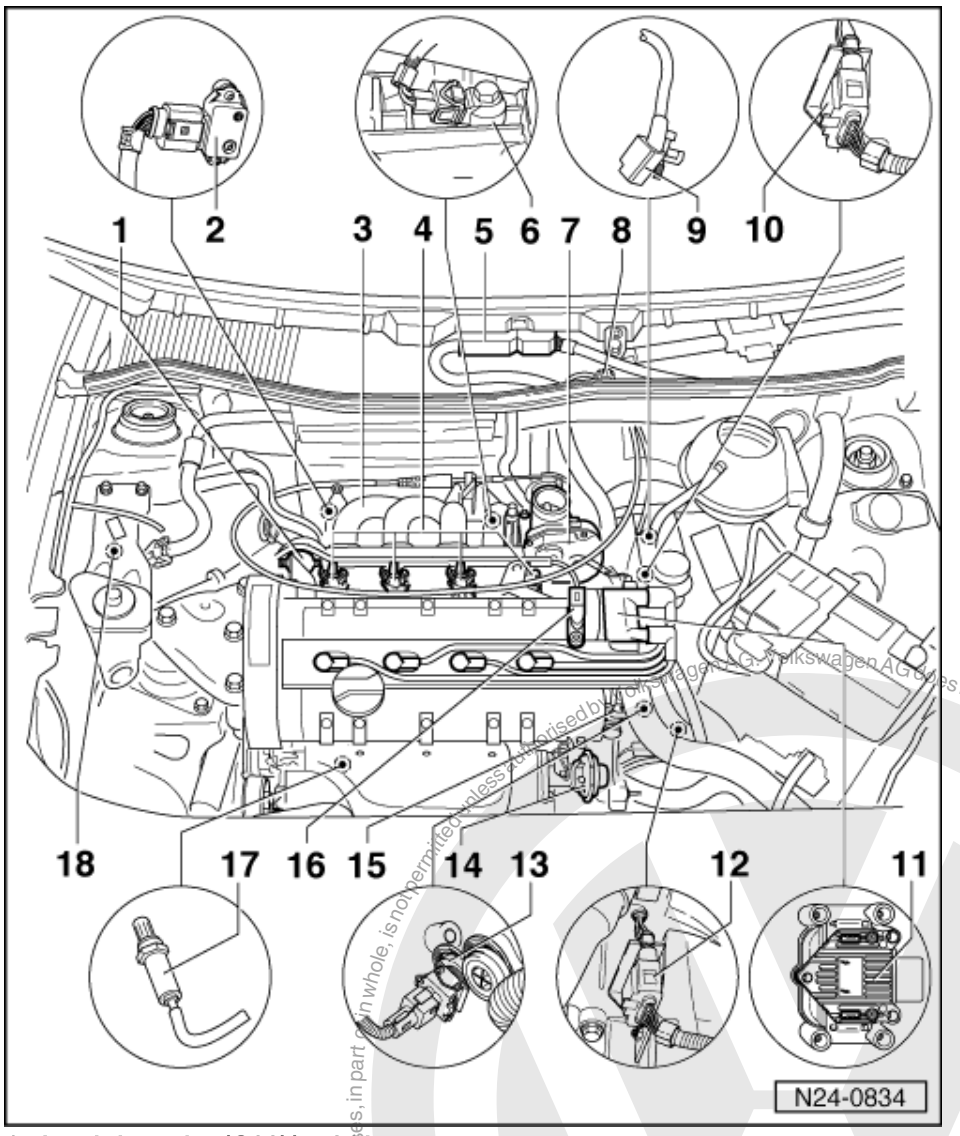

17 Lambda probe (G39)*, 50 Nm
- Location: In front exhaust pipe

18 Activated charcoal filter solenoid valve 1 (N80)*/**
- Activated charcoal filter system

=> Repair group 20; Activated charcoal filter system Activated charcoal filter system

1.3 - General notes on injection

Servicing ignition part:

=> Repair group 28

- The engine control unit is equipped with self-diagnosis. Before carrying out repairs and fault finding the fault memory of all control units must be interrogated using the automatic test sequence. This is necessary as various control units are connected to each other via a data bus. The vacuum hoses and connections must also be checked (unmetered air).
- Fuel hoses in engine compartment must only be secured with spring type clips. The use of clamp or screw type clips is not permissible.
- Disconnecting and connecting the battery must only be done with the ignition switched off, otherwise the engine control unit could be damaged.
- Components marked with * are checked via the self diagnosis

Protected by copyright. Copying for private or commercial purposes, in part or in whole, is not permitted unless authorised by Volkswagen AG. Volkswagen AG does not guarantee or accept any liability with respect to the correctness of information in this document. Copyright by Volkswagen AG.
satelettronica

=> Page 8 , interrogating and erasing fault memory.
- Components marked with **can be checked with the final control diagnosis => Page 21 .
- For trouble-free operation of the electrical components, a voltage of at least 11.5 V is necessary.

- Do not use sealants containing silicone. Particles of silicone drawn into the engine, will not be burnt in the engine and damage the Lambda probe.
- If the engine starts, runs for a short period and then stops, after fault finding, repairs or component tests, then the fault may lie with the immobilizer which is blocking the engine control unit. The fault memory must be interrogated and if necessary the control unit matched => Page 109 .
- During some checks it is possible that the control unit will recognise and store a fault. Therefore after completing all checks and repairs the fault memory must be interrogated and if necessary erased.
  => Page 8 , interrogating and erasing fault memory
- Vehicles with an airbag are fitted with a crash/fuel shut-off. It reduces the risk of a vehicle burning in the event of a crash in that the fuel pump is switched off by the fuel pump relay. At the same time this device improves the starting of the engine. When the door is opened the fuel pump is activated for 2 seconds to build-up pressure in the fuel system.

Safety precautions =>Page 62

Rules for cleanliness => Page 63

Technical data => Page 64

Checking intake system for leaks (unmetered air) => Page 98 .

Checking engine operating mode => Page 102

Protected by copyright. Copying for private or commercial purposes, in part or in whole, is not permitted unless authorised by Volkswagen AG. Volkswagen AG does not guarantee or accept any liability with respect to the correctness of information in this document. Copyright by Volkswagen AG.
satelettronica

1.4 - Removing and installing parts of the injection system

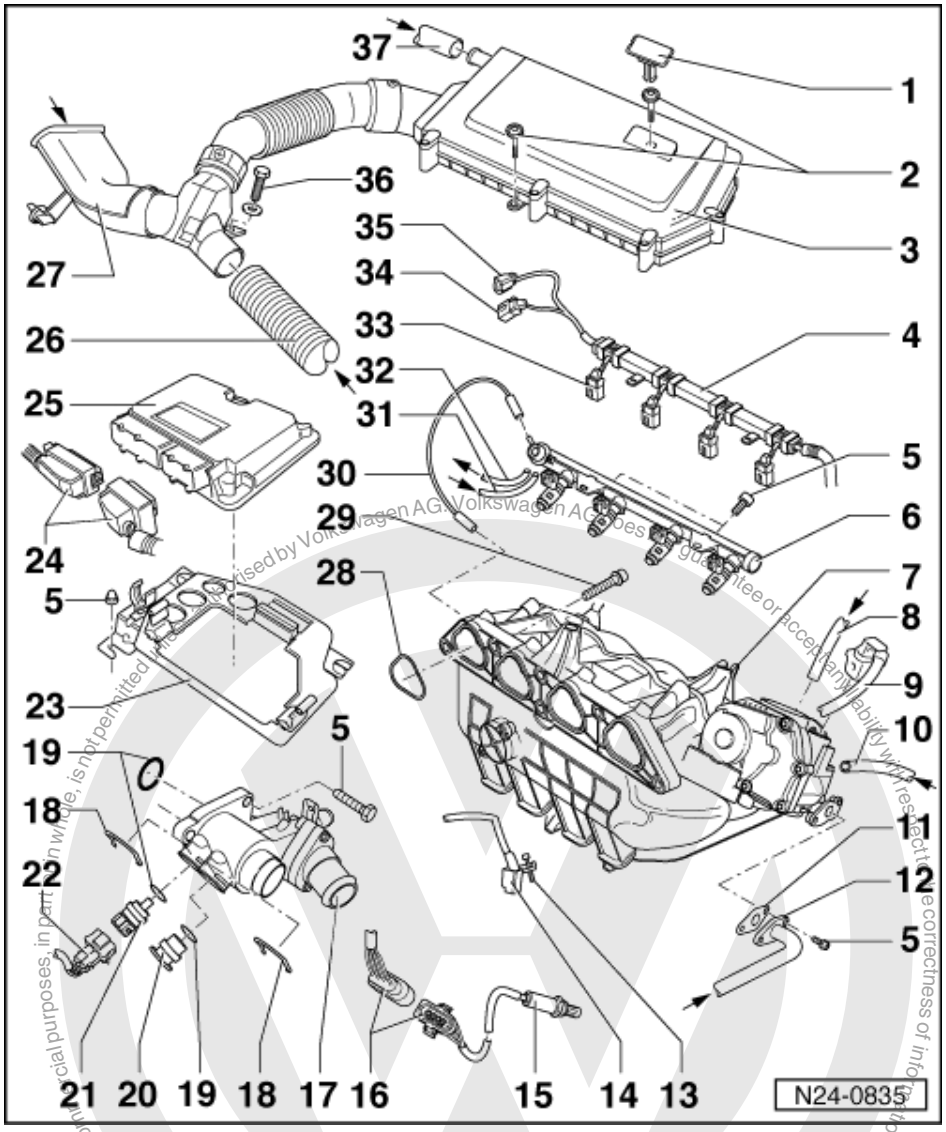

1 Plug
- Note installation position

2 3 Nm
- Notes on installing => Page 62

3 Air cleaner
- Dismantling and assembling => Page 59
- Removing and installing air cleaner => Page 62 , Fig. 3

4 Cable guide
- Clipped onto fuel rail

5 10 Nm

satelettronica

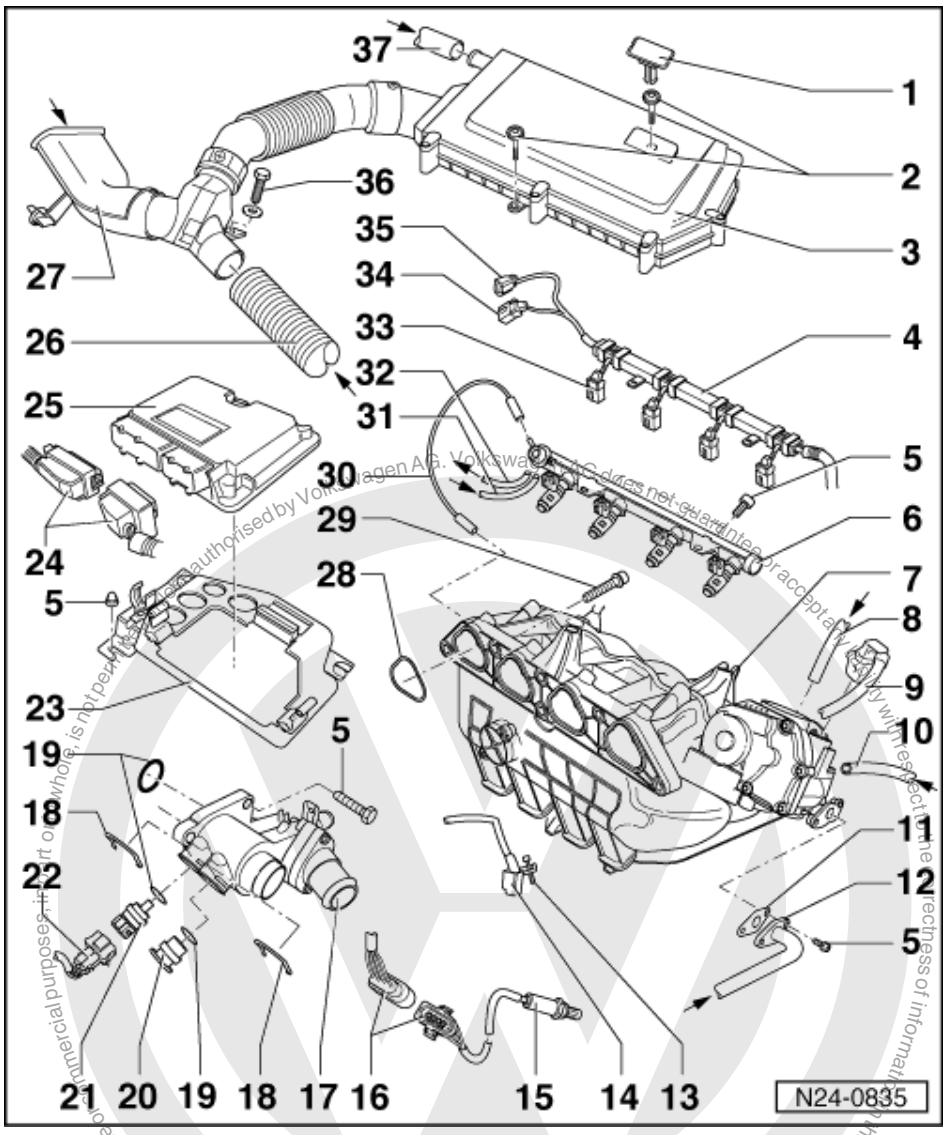

6 Fuel manifold with injectors
- Dismantling and assembling => Page 56

7 Intake manifold
- Dismantling and assembling => Page 53

8 From activated charcoal filter solenoid valve (N80)*/**

=> Repair group 20; Activated charcoal filter system Activated charcoal filter system

9 Connector
- Grey, 8 pin
- For throttle valve control part (J338)
- Connector contacts are gold-plated

10 From brake servo

satelettronica

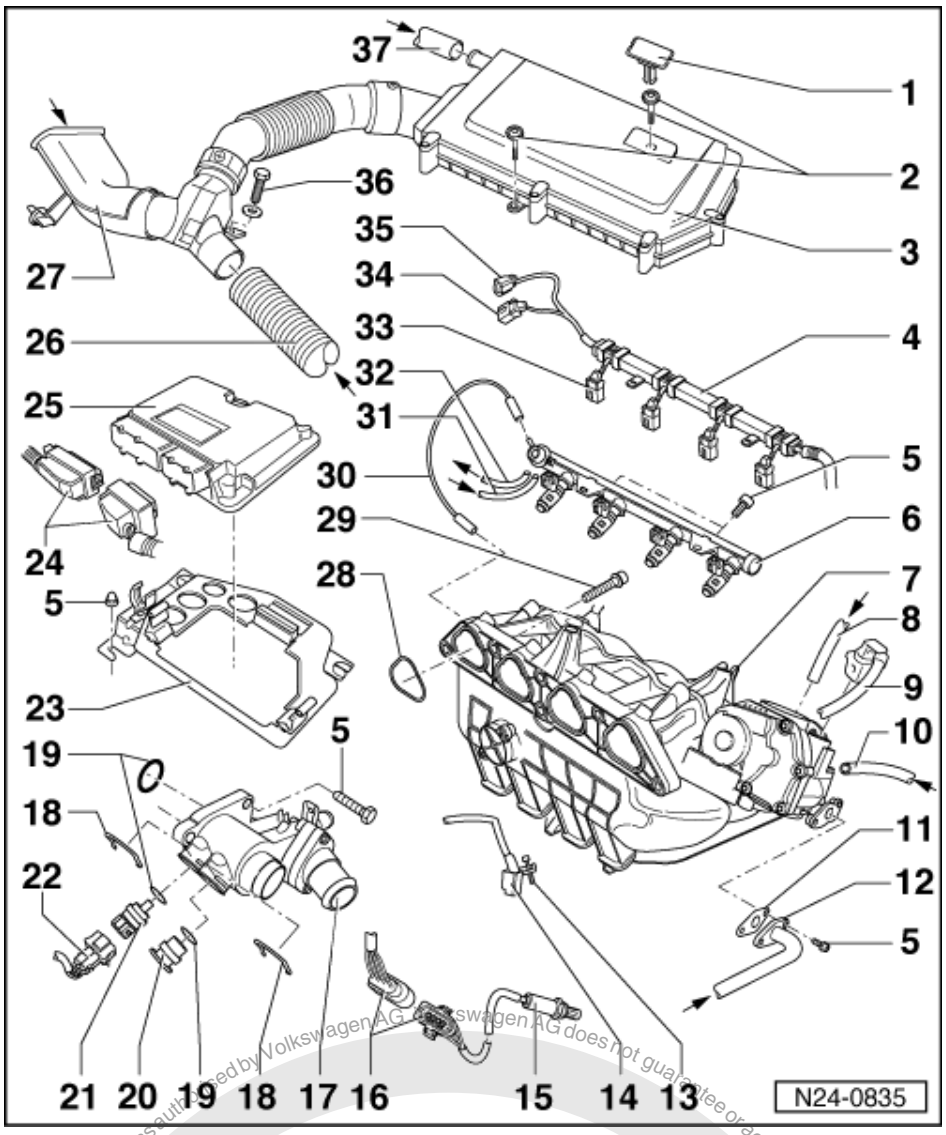

11 Gasket
- Renew

12 Connecting pipe
- Only vehicles with engine code AHW
- From exhaust gas recirculation valve:

=> Repair group 26; Exhaust gas recirculation system; Servicing parts of the exhaust gas recirculation system
Exhaust gas recirculation system Servicing parts of the exhaust gas recirculation system

13 5 Nm

14 Engine speed sender (G28)*
- To remove, remove intake manifold item 7
- Checking => Page 86
- Fitting location => Page 38 , fitting location overview

satelettronica
Protected by copyright. Copying for private or commercial purposes, in part or in whole, is not permitted unless authorised by Volkswagen AG. Volkswagen AG does not guarantee or accept any liability with respect to the correctness of information in this document. Copyright by Volkswagen AG.

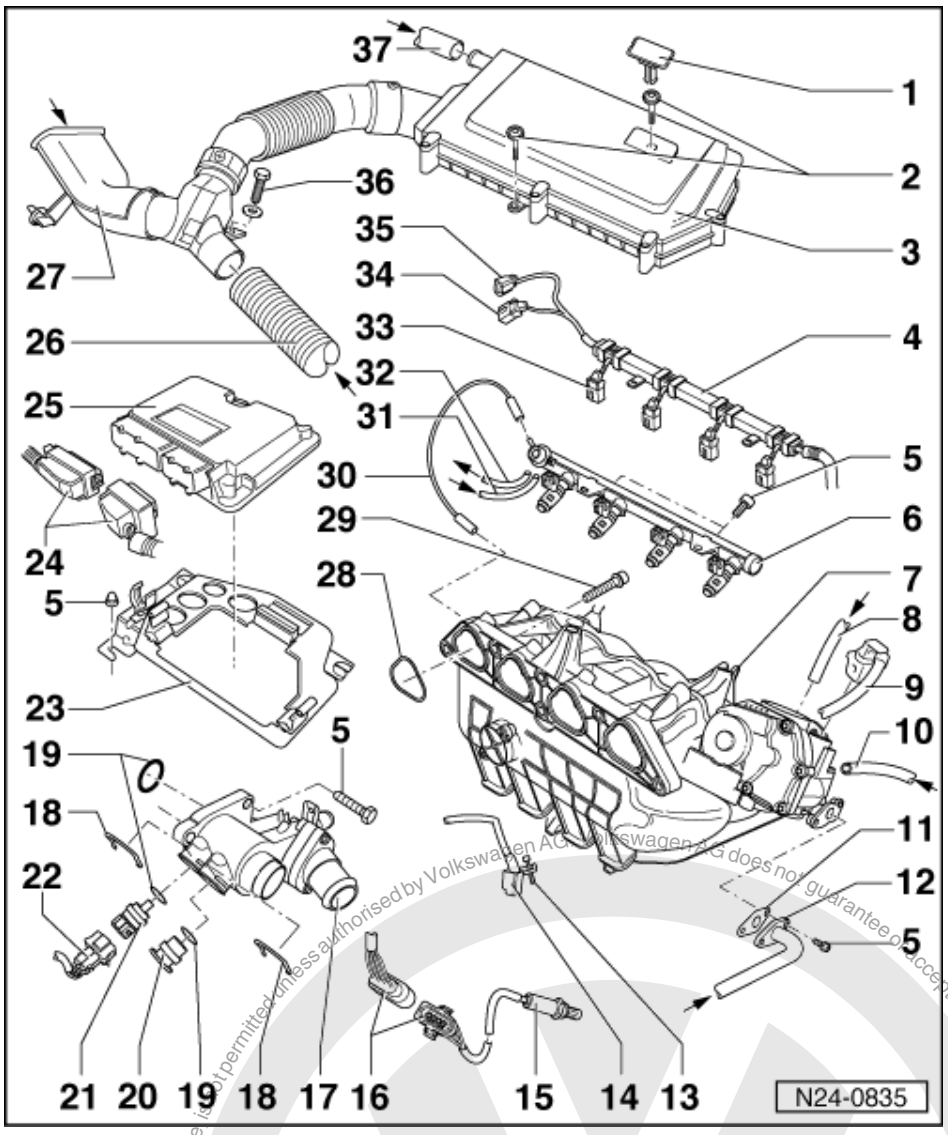

15 Lambda probe (G39)*, 50 Nm

- Grease only the threads with "G 052 112 A3"; "G 052 112 A3" must not get into the slots on the probe body
- Remove and install with ring spanner 3337
- Checking Lambda control
  => Page 99
- Probe heating voltage supply via fuel pump relay (J17)
- Checking Lambda probe heating => Page 64
- Check probe heating for continuity
- Fitting location => Page 38 , fitting location overview

16 4-pin connector

- Black
- For Lambda probe and Lambda probe heating
- Connector contacts 3 and 4 are gold-plated
- Fitting location => Page 38 , fitting location overview

Protected by copyright. Copying for private or commercial purposes, in part or in whole, is not permitted unless authorised by Volkswagen AG. Volkswagen AG does not guarantee or accept any liability with respect to the correctness of information in this document. Copyright by Volkswagen AG.
satelettronica

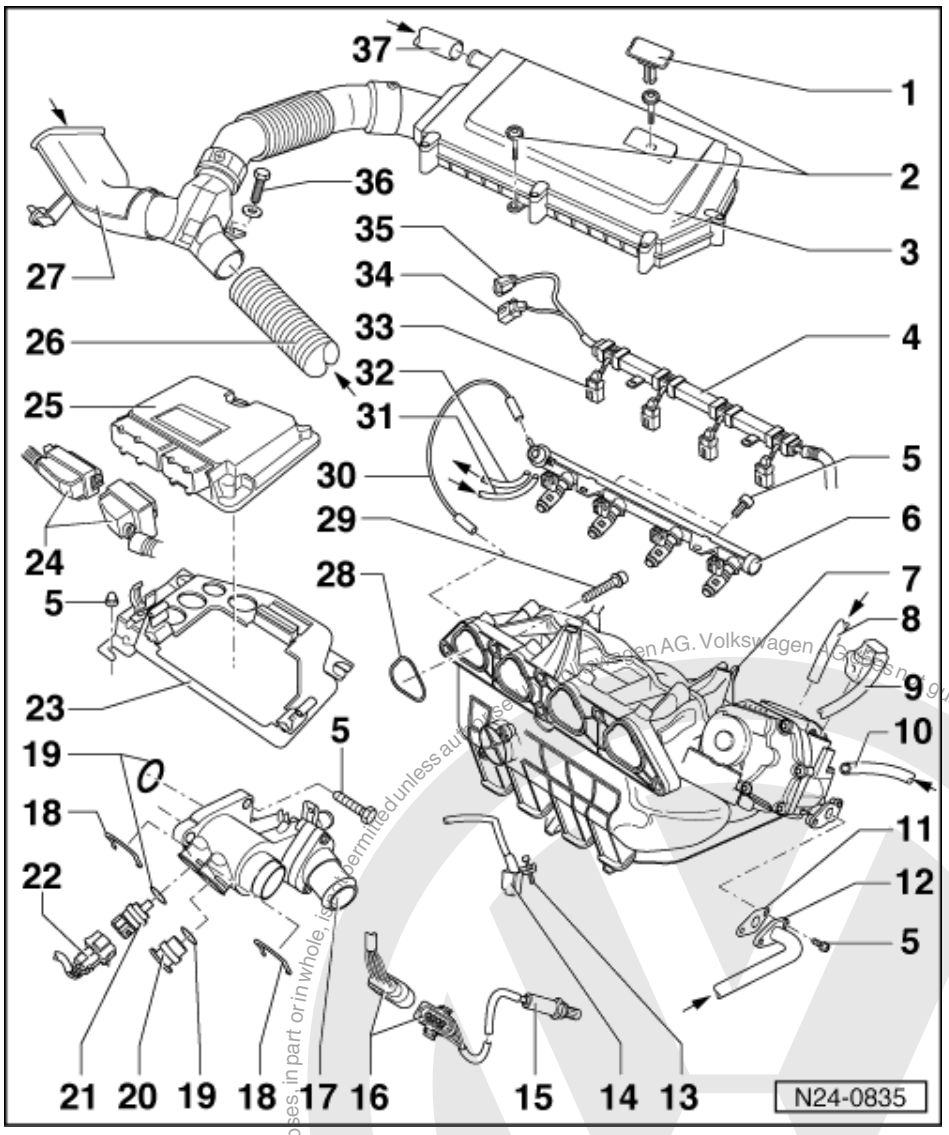

17 Thermostat housing

18 Retaining clip

- Check seated securely

19 O ring

- Renew if damaged

20 Plug

- If necessary release pressure in cooling system before removing

21 Coolant temperature sender (G62)*

- For engine control unit
- With coolant temperature gauge sender (G2)
- If necessary release pressure in cooling system before removing
- Checking =>Page 81
- Resistance value between contacts C and D =>Page 61 , Fig. 1

satelettronica

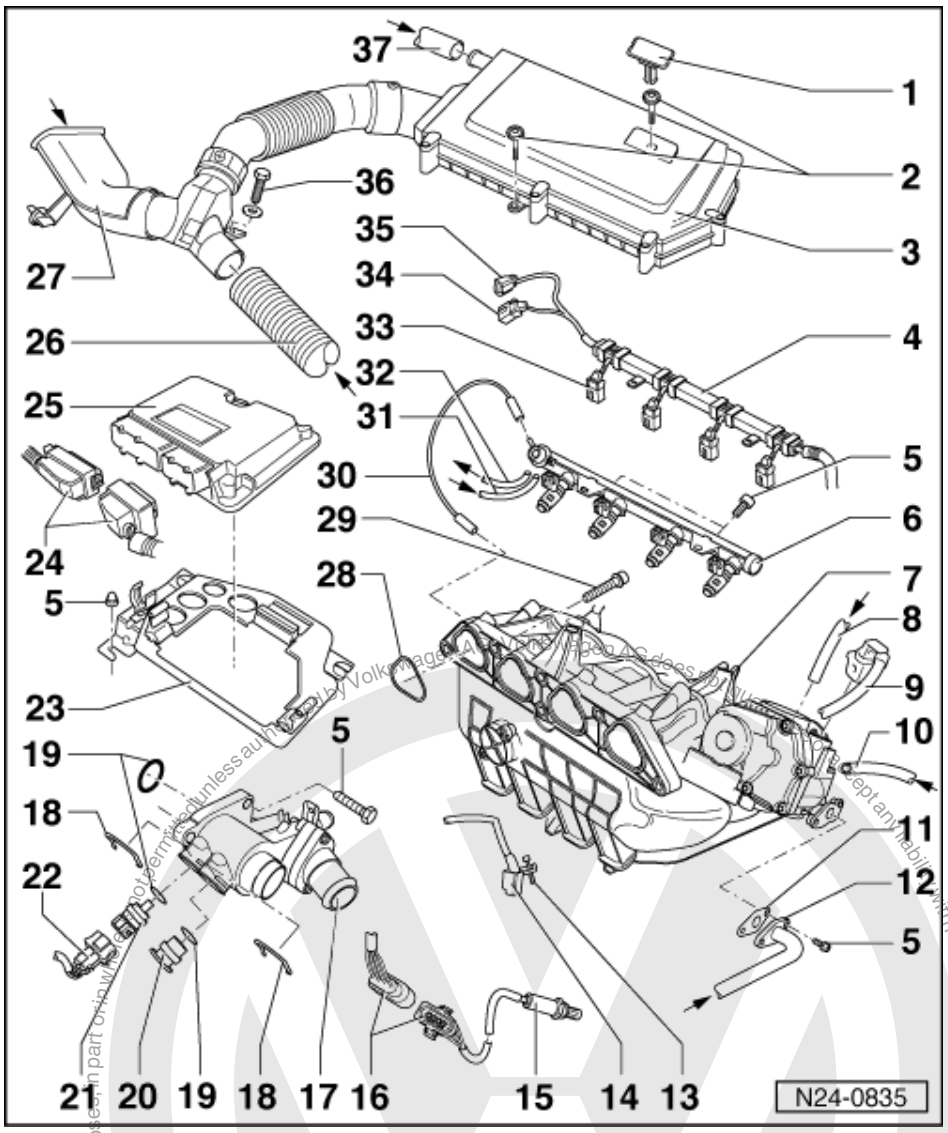

22 Connector
- Black, 4 pin
- For coolant temperature sender (G62) and coolant temperature gauge sender (G2)

23 Retaining frame

24 Connector
- Only disconnect or connect with ignition switched off

25 Engine control unit*

(Control unit for 4CV injection system-J448)
- Checking voltage supply => Page 104
- Renew => Page 106
- Coding => Page 107
- Fitting location => Page 38 , engine compartment overview

satelettronica

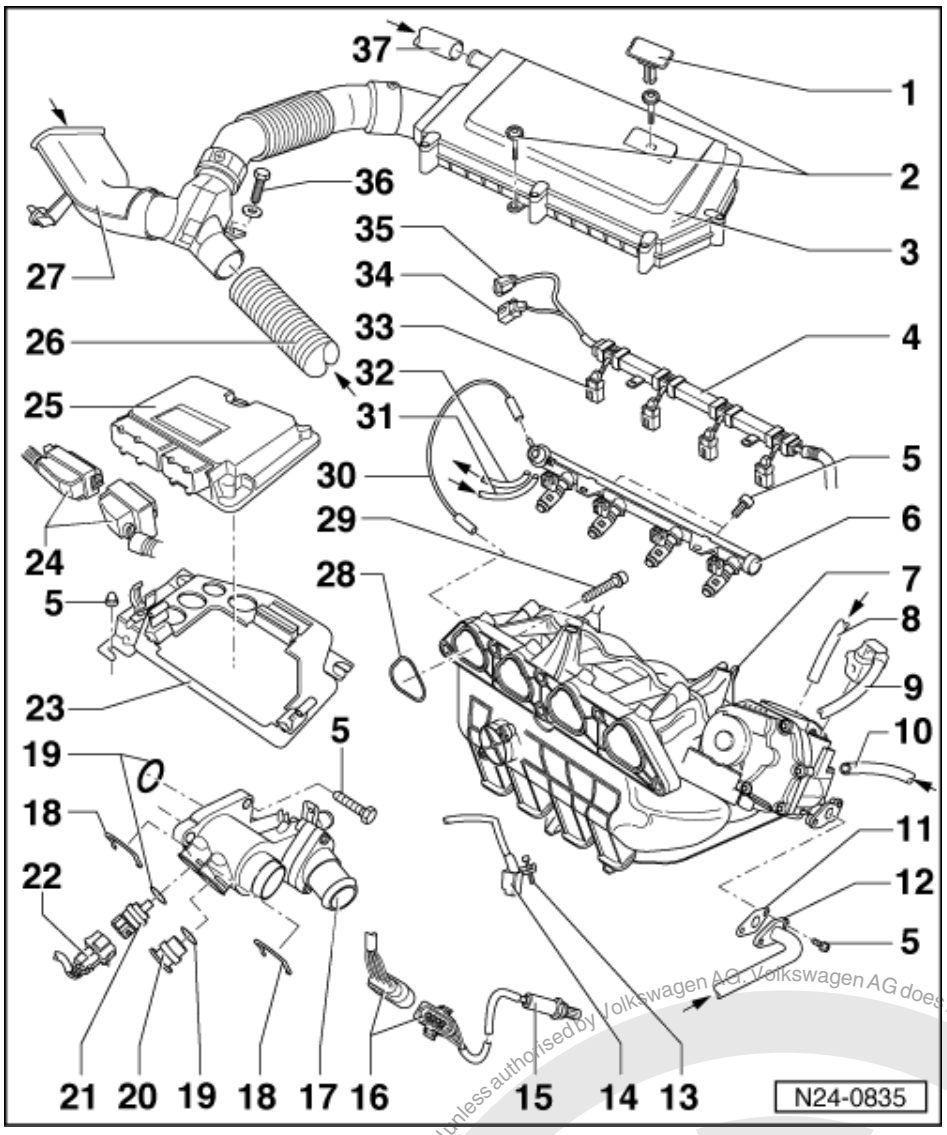

26 Warm air intake hose

- From warm air collector plate:

=> Repair group 26; Removing and installing parts of exhaust system Removing and installing parts of exhaust system

27 Connecting piece for cold air intake

- Additionally secured on body with retaining clip

28 Seal

- Renew

29 20 Nm

30 Vacuum hose

satelettronica
Protected by copyright. Copying for private or commercial purposes, in part or in whole, is not permitted unless authorised by Volkswagen AG. Volkswagen AG does not guarantee or accept any liability with respect to the correctness of information in this document. Copyright by Volkswagen AG.

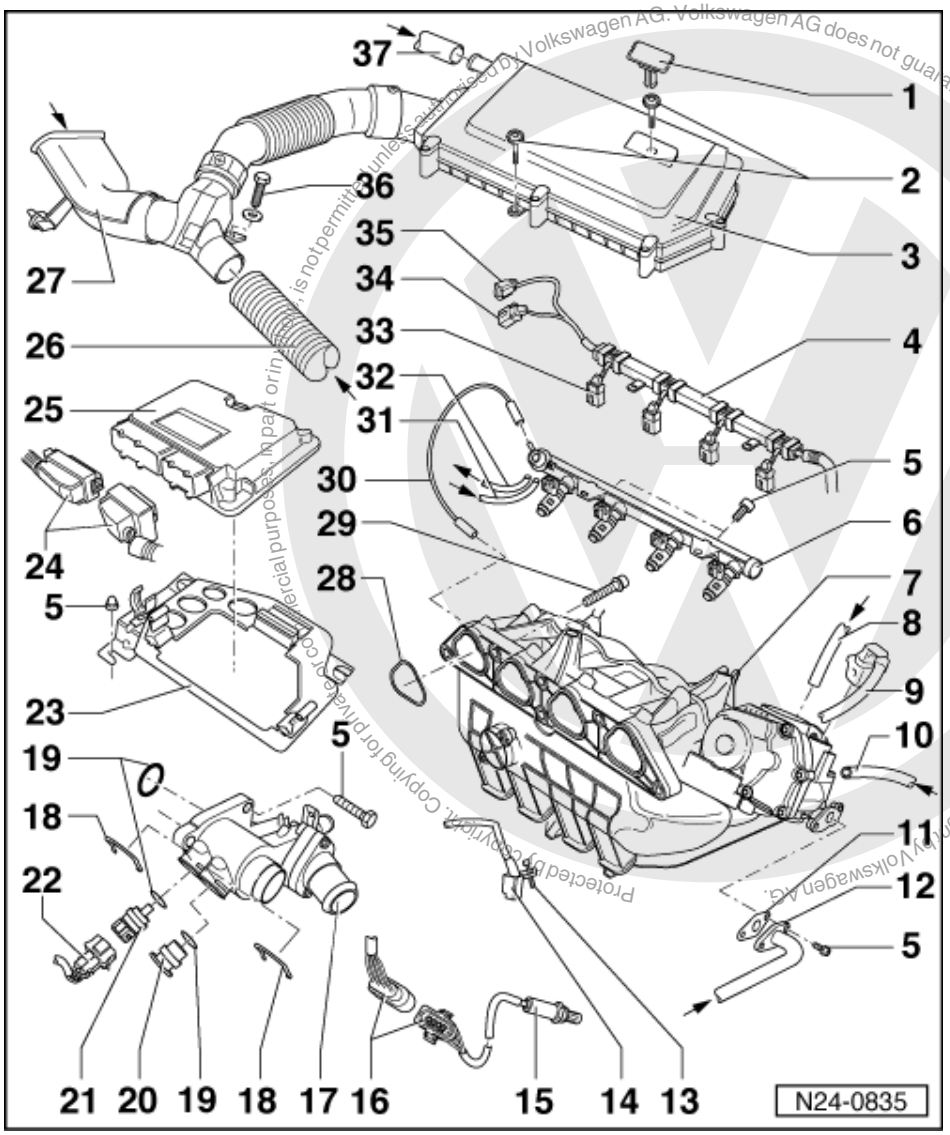

31 Supply hose

- Black with white marks
- Secure with spring-type clips
- Check securely seated
- From fuel filter:

=> Repair Group 20; Removing and installing parts of fuel supply system; Removing and installing fuel tank with attachments and fuel filter Removing and installing parts of fuel supply system Removing and installing fuel tank with attachments and fuel filter

32 Return hose

- Blue or with blue marking
- Secure with spring-type clips
- Check securely seated
- To the fuel delivery unit in fuel tank

=> Repair Group 20; Removing and installing parts of fuel supply system; Removing and installing fuel tank with attachments and fuel filter Removing and installing parts of fuel supply system Removing and installing fuel tank with attachments and fuel filter

satelettronica

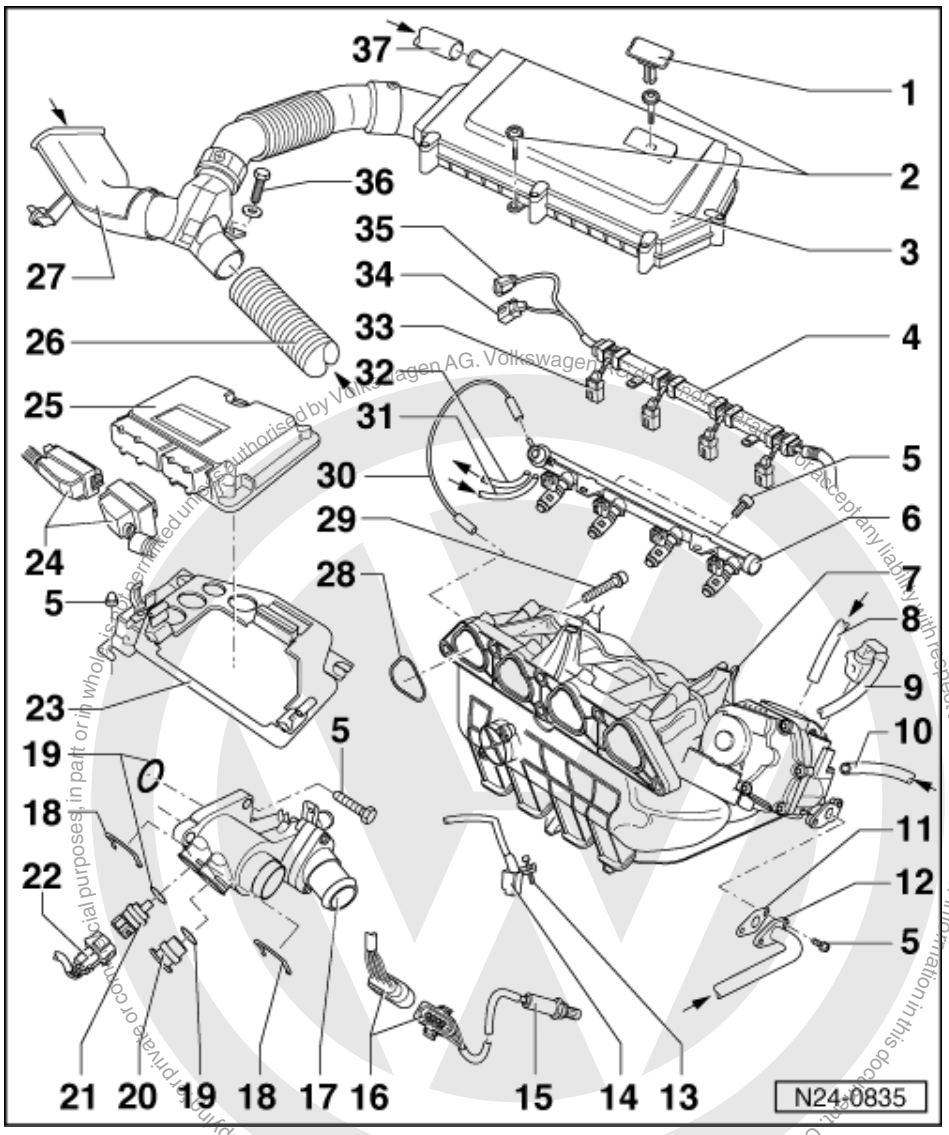

33 Connector

- Black, 2-pin
- For injector (N30...N33)

34 Connector

- Black, 2-pin
- For knock sensor 1 (G61)
- Connector contacts are gold-plated
- Fitting location => Page 38 , engine compartment overview

35 Connector

- Black, 4 pin
- For intake manifold pressure sender and sender for intake air temperature in intake manifold
- Connector contacts are gold-plated
- Fitting location => Page 38 , engine compartment overview

satelettronica

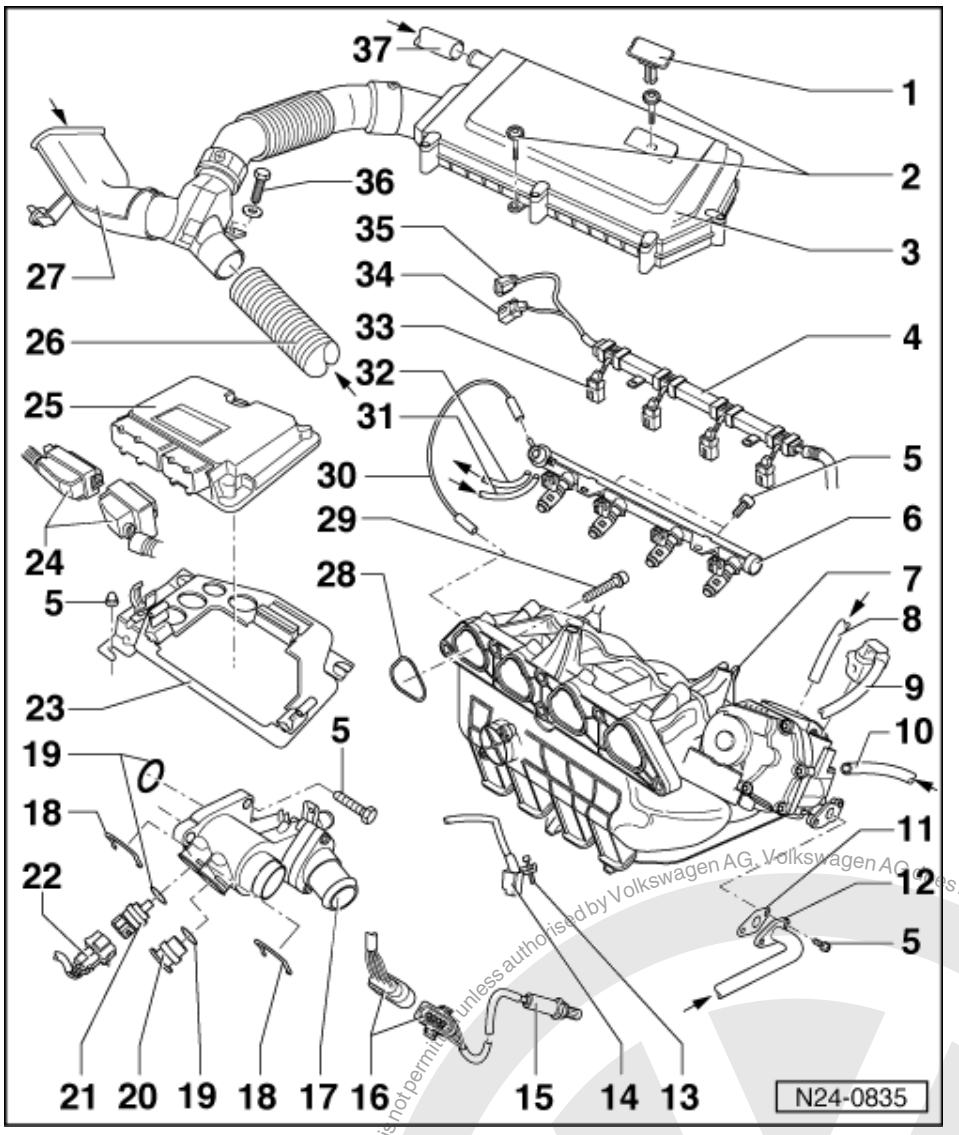

36 5 Nm

37 Crankcase breather hose

- From oil separator:

=> Repair group 17; Removing and installing parts of lubrication system Removing and installing parts of lubrication system

Protected by copyright. Copying for private or commercial purposes, in part or in whole, is not permitted unless authorised by Volkswagen AG. Volkswagen AG does not guarantee or accept any liability with respect to the correctness of information in this document. Copyright by Volkswagen AG.
satelettronica

1.5 - Dismantling and assembling intake manifold

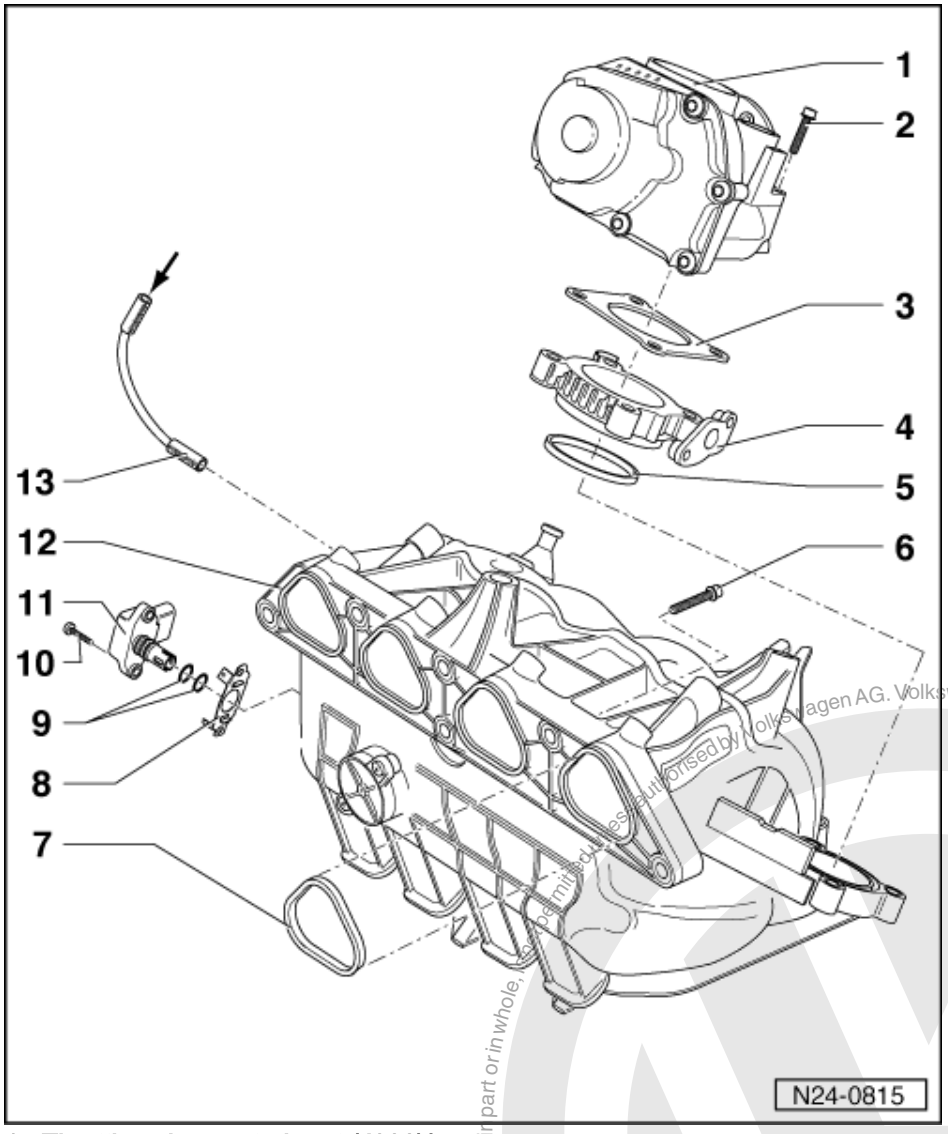

1 Throttle valve control part (J338)*

- Components of the throttle valve control part (J338):
  Throttle valve positioner (V60)*/**, throttle valve potentiometer (G88) *, throttle valve potentiometer (G69) * and idling switch (F60)*
- Checking => Page 66
- If replaced match engine control unit => Page 108
- If replaced adapt control unit for automatic gearbox:

=> Self-diagnosis for automatic gearbox 001; Repair group 01; Performing self-diagnosis; Introduce basic setting Performing self-diagnosis Introduce basic setting

Protected by copyright. Copying for private or commercial purposes, in part or in whole, is not permitted unless authorised by Volkswagen AG. Volkswagen AG does not guarantee or accept any liability with respect to the correctness of information in this document. Copyright by Volkswagen AG.
satelettronica

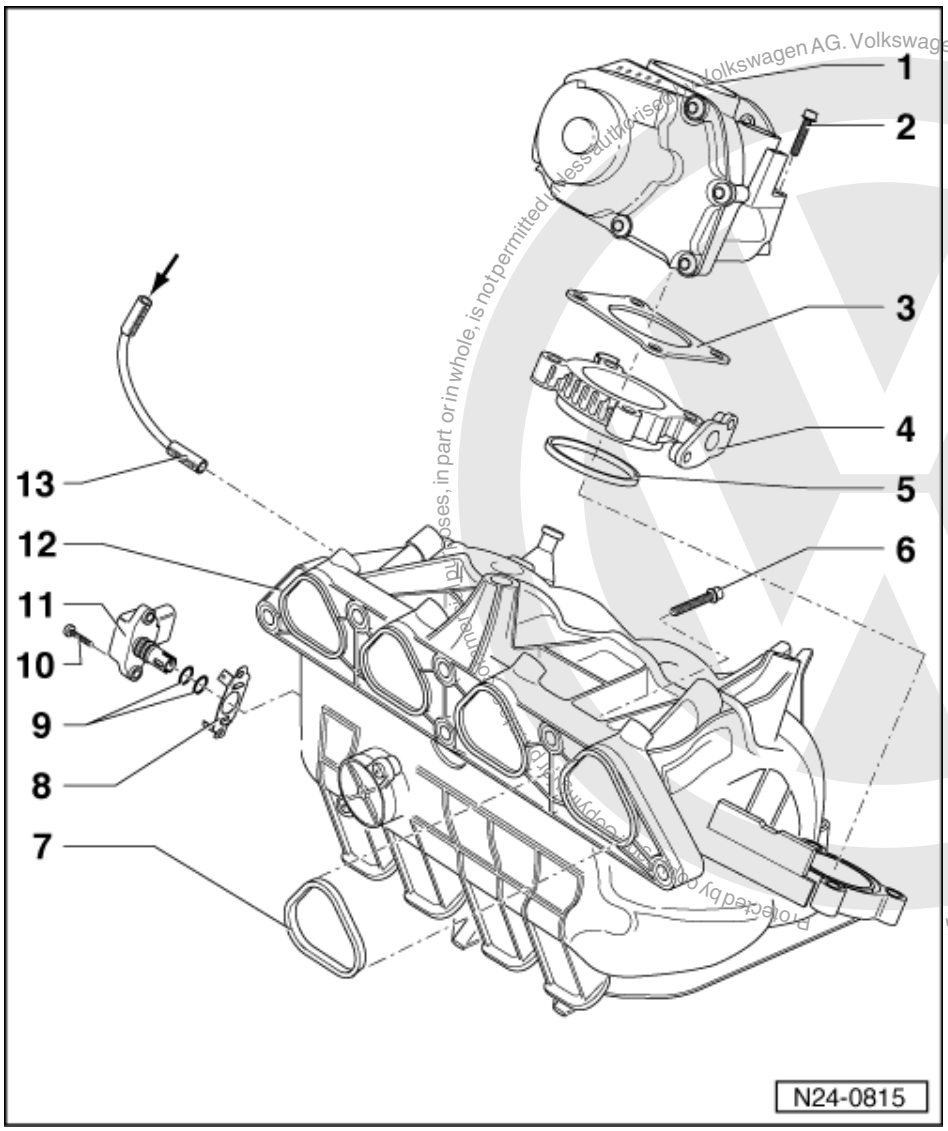

2 10 Nm
3 Gasket
- Note installation position
- Renew

4 Intake connecting flange
5 Seal
- Renew if damaged

6 20 Nm
7 Seal
- Renew

8 Guide plate
- Note installation position
- Renew if damaged

9 O ring
- Renew if damaged

10 3 Nm

Volkswagen AG. Volkswagen AG does not guarantee or accept any liability with respect to the correctness of information in this document. Copyright by Volkswagen AG
Protected by copyright. Copying for private or commercial purposes, in part or in whole, is not permitted unless authorised
satelettronica

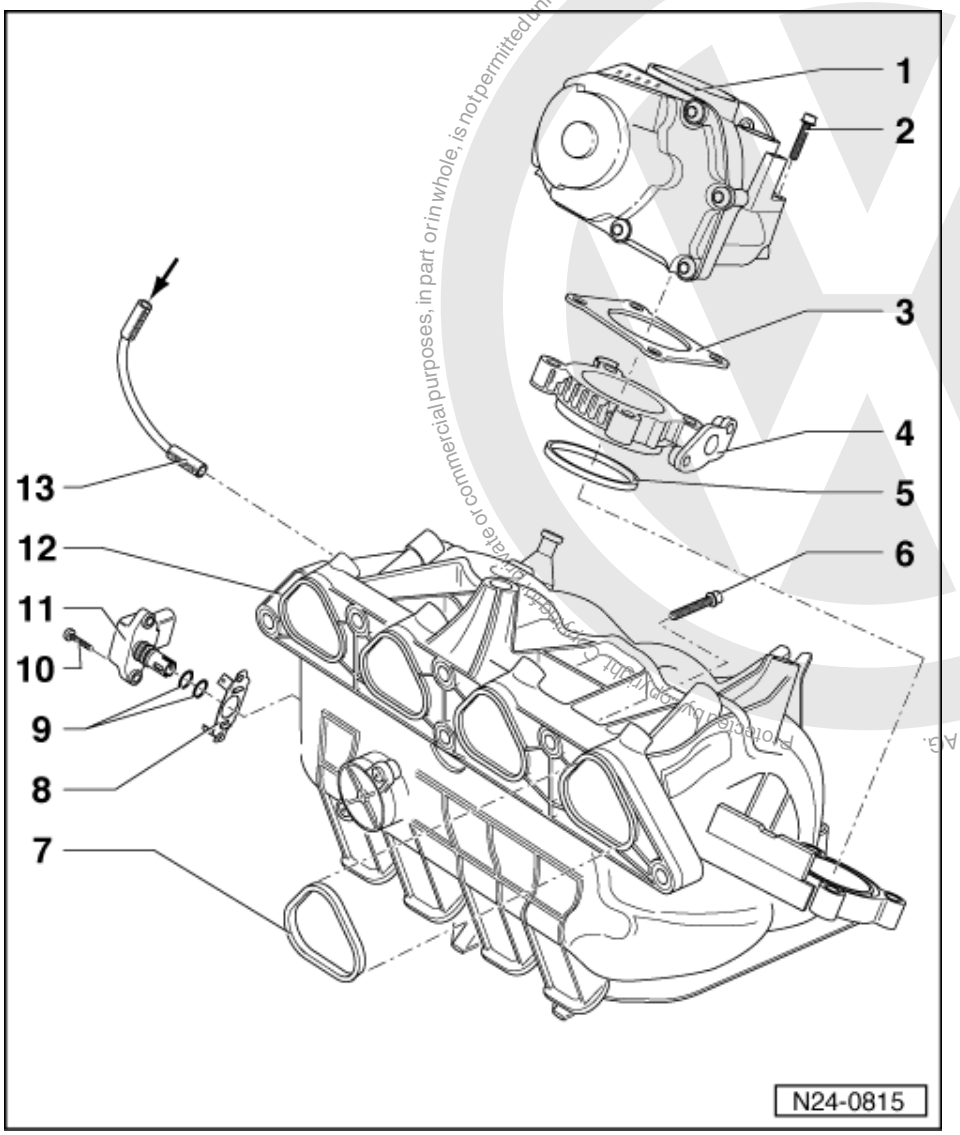

11 Intake manifold pressure sender (G71)* with intake air temperature sender (G42)*

- Checking intake manifold pressure sender
  =>Page 74
- Checking intake air temperature sender =>Page 77
- Intake air temperature sender resistance values between contacts 1 and 2=>Page 61 , Fig. 2

12 Intake manifold

- Removing and installing
  =>Page 43 , removing and installing parts of the injection system

13 Vacuum hose

- From fuel pressure regulator
  => Page 58 , item 12

satelettronica

1.6 - Dismantling and assembling fuel rail with injectors

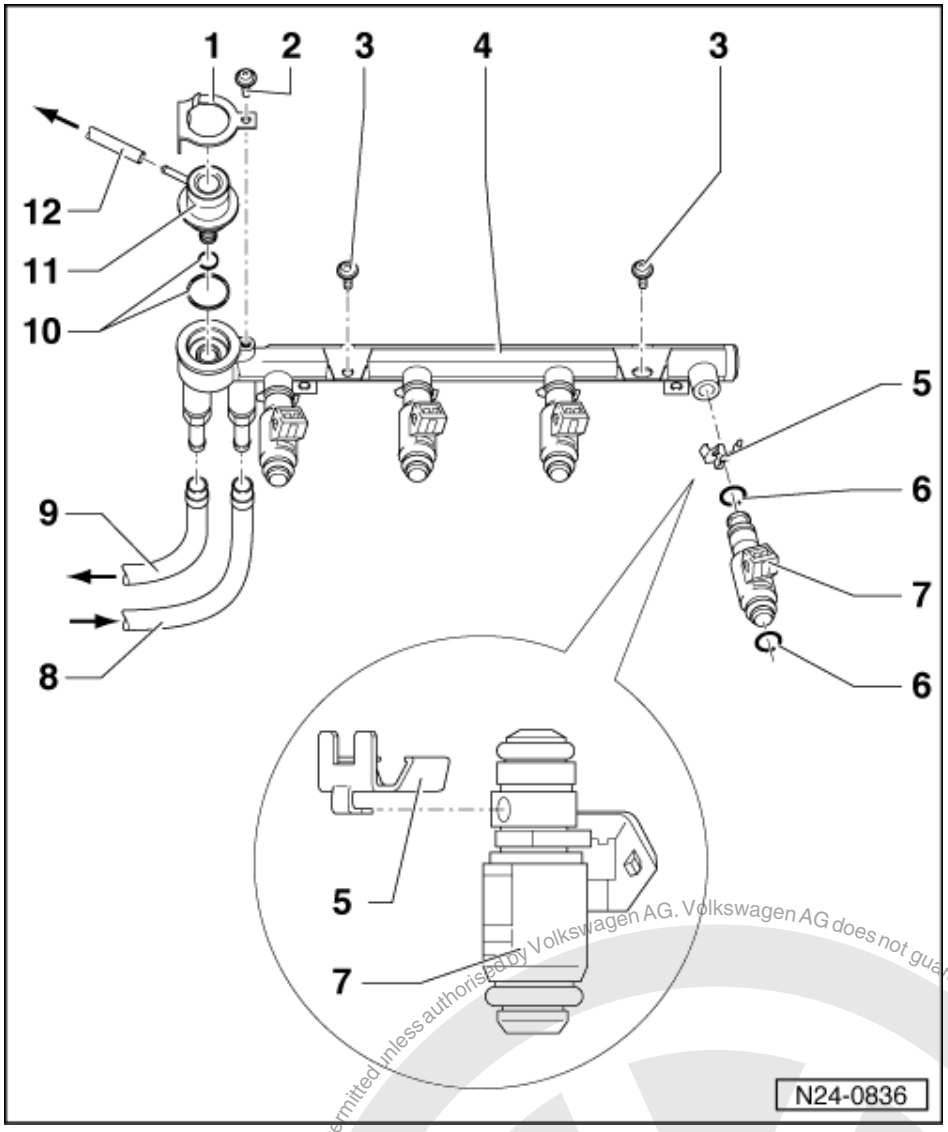

1 Retaining plate
- Note installation position
- Renew if damaged

2 5 Nm

3 10 Nm

4 Fuel rail
- Removing and installing
  =>Page 44 , item 6

5 Retaining clip
- Ensure seated correctly at injector and fuel rail

Protected by copyright. Copying for private or commercial purposes, in part or in whole, is not permitted unless authorised by Volkswagen AG. Volkswagen AG does not guarantee or accept any liability with respect to the correctness of information in this document. Copyright by Volkswagen AG.
satelettronica

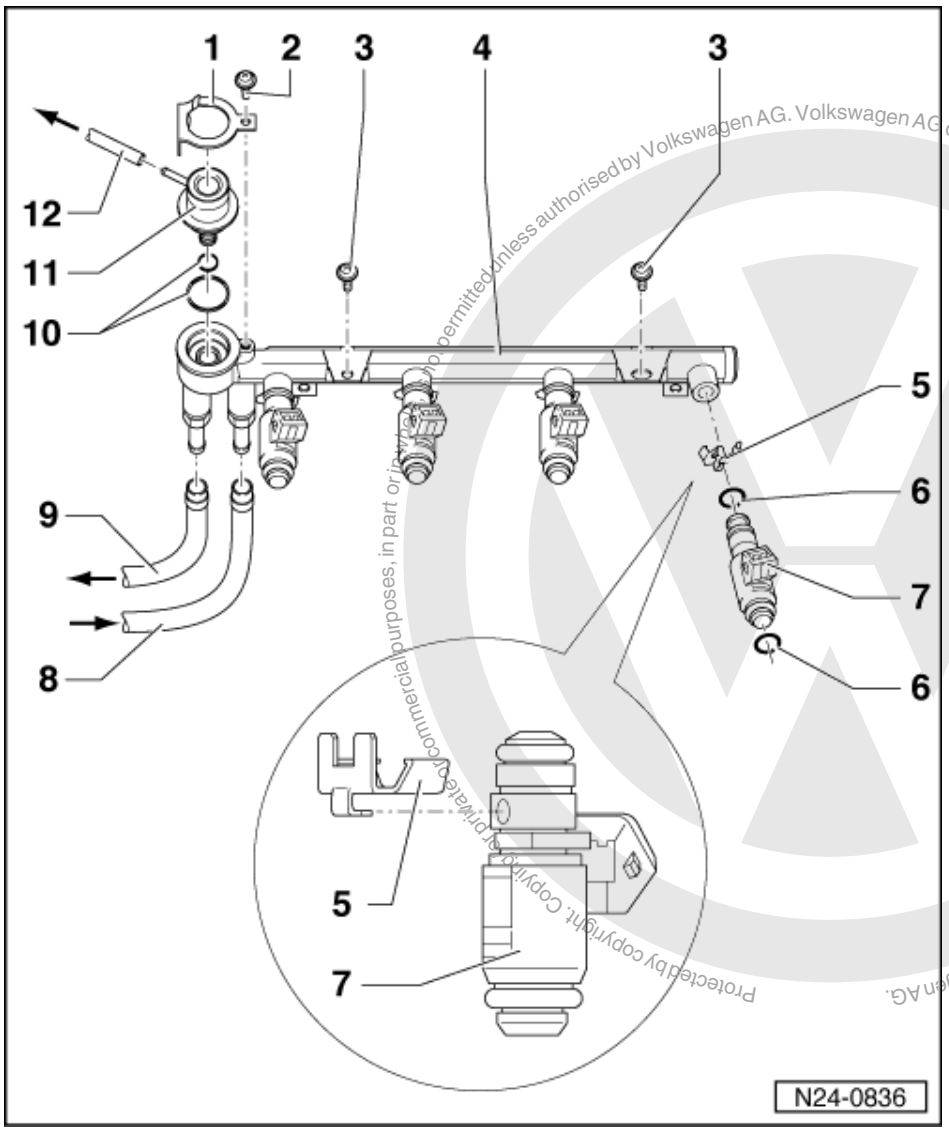

6 O ring
- Renew
- Before installing moisten with clean engine oil

7 Injectors (N30...N33)*
- Checking => Page 87
- Resistance 14.0...17.0 ω

8 Supply hose
- Black with white marks
- Secure with spring-type clips
- Check securely seated
- From fuel filter:

=> Repair Group 20; Removing and installing parts of fuel supply system; Removing and installing fuel tank with attachments and fuel filter Removing and installing parts of fuel supply system Removing and installing fuel tank with attachments and fuel filter

Protected by copyright. Copyright by Volkswagen AG. Volkswagen AG does not guarantee or accept any liability with respect to the correctness of information in this document. Copyright by Volkswagen AG. Not permitted unless authorised by Volkswagen AG. Commercial purposes, in part or in whole, are not permitted unless authorised by Volkswagen AG.
satelettronica

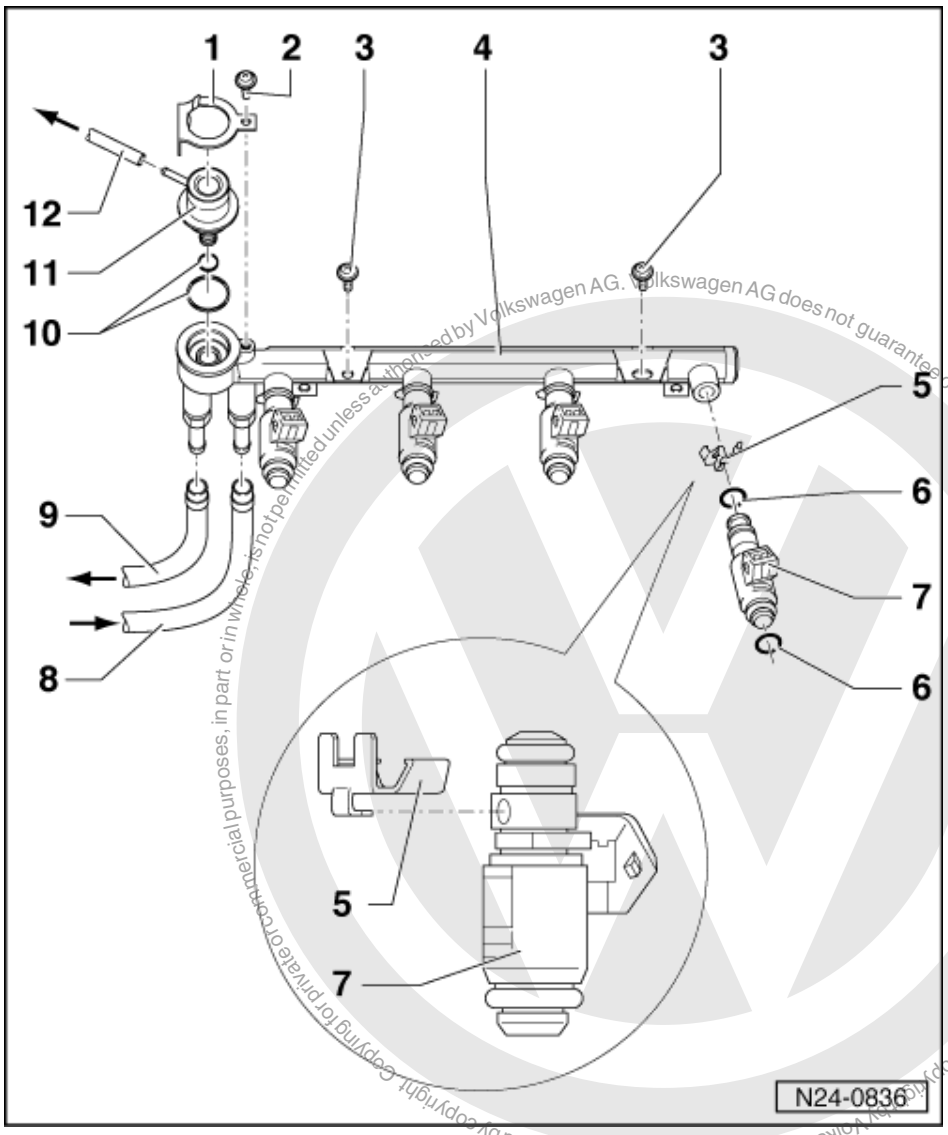

Protected by copyright. Copying for private or commercial purposes, in part or in whole, is not permitted unless authorised by Volkswagen AG. Volkswagen AG does not guarantee or accept any liability with respect to the correctness of information in this document. Copyright by Volkswagen AG.

9 Return hose
- Blue or with blue marking
- Secure with spring-type clips
- Check securely seated
- To the fuel delivery unit in fuel tank

=> Repair Group 20; Removing and installing parts of fuel supply system; Removing and installing fuel tank with attachments and fuel filter Removing and installing parts of fuel supply system Removing and installing fuel tank with attachments and fuel filter

10 O ring
- Renew if damaged

11 Fuel pressure regulator
- Checking => Page 94 , checking fuel pressure regulator and holding pressure

12 Vacuum hose
- To intake manifold => Page 55 , item 13

satelettronica

1.7 - Dismantling and assembling air cleaner

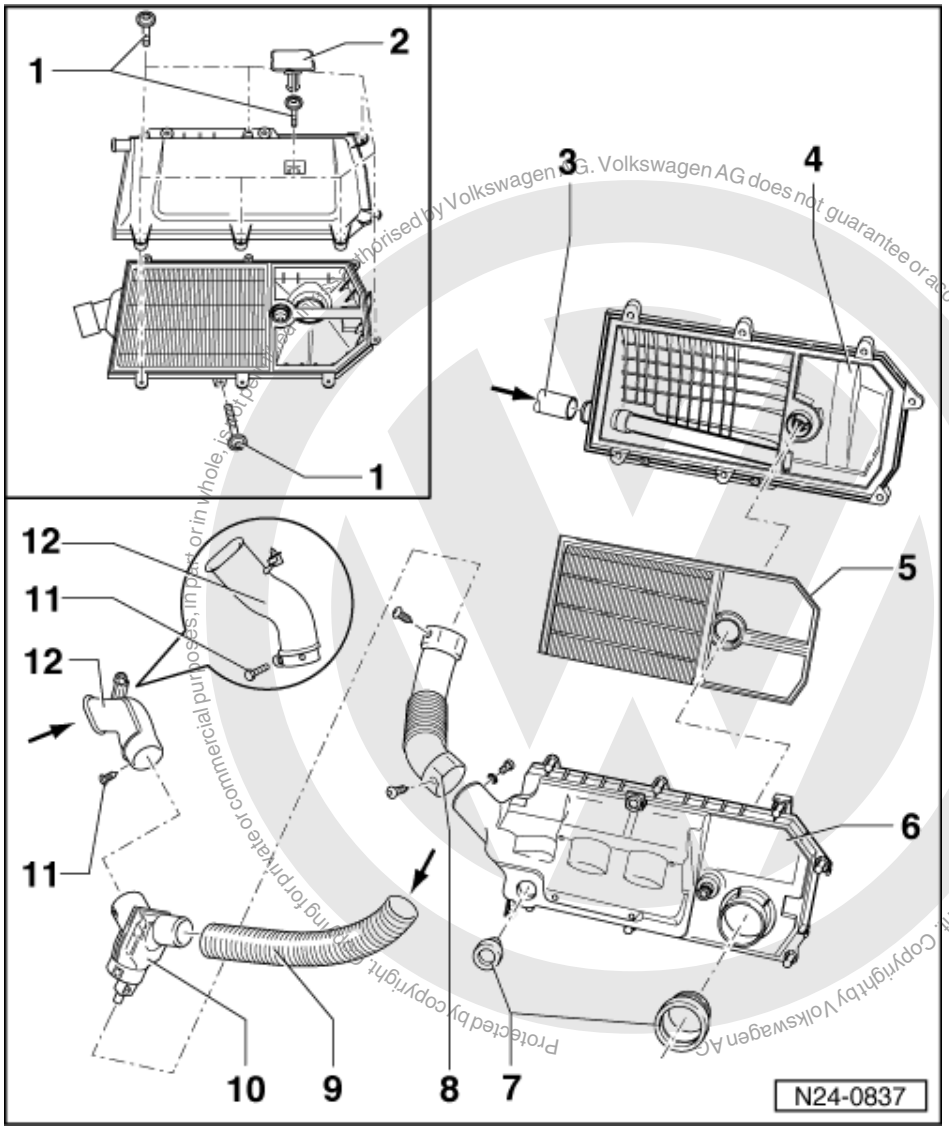

Protected by copyright. Copyright by Volkswagen AG. Volkswagen AG does not guarantee or accept any liability with respect to the correctness of information in this document. Copying for private or commercial purposes, in part or in whole, is not permitted unless authorised by Volkswagen AG.

satelettronica

Removing and installing air cleaner => Page 62 , Fig. 3

1 3 Nm
- Notes on installing => Page 62

2 Plug
- Note installation position

3 Crankcase breather hose
- From oil separator:

=> Repair group 17; Removing and installing parts of lubrication system Removing and installing parts of lubrication system

4 Air cleaner upper part

5 Filter element

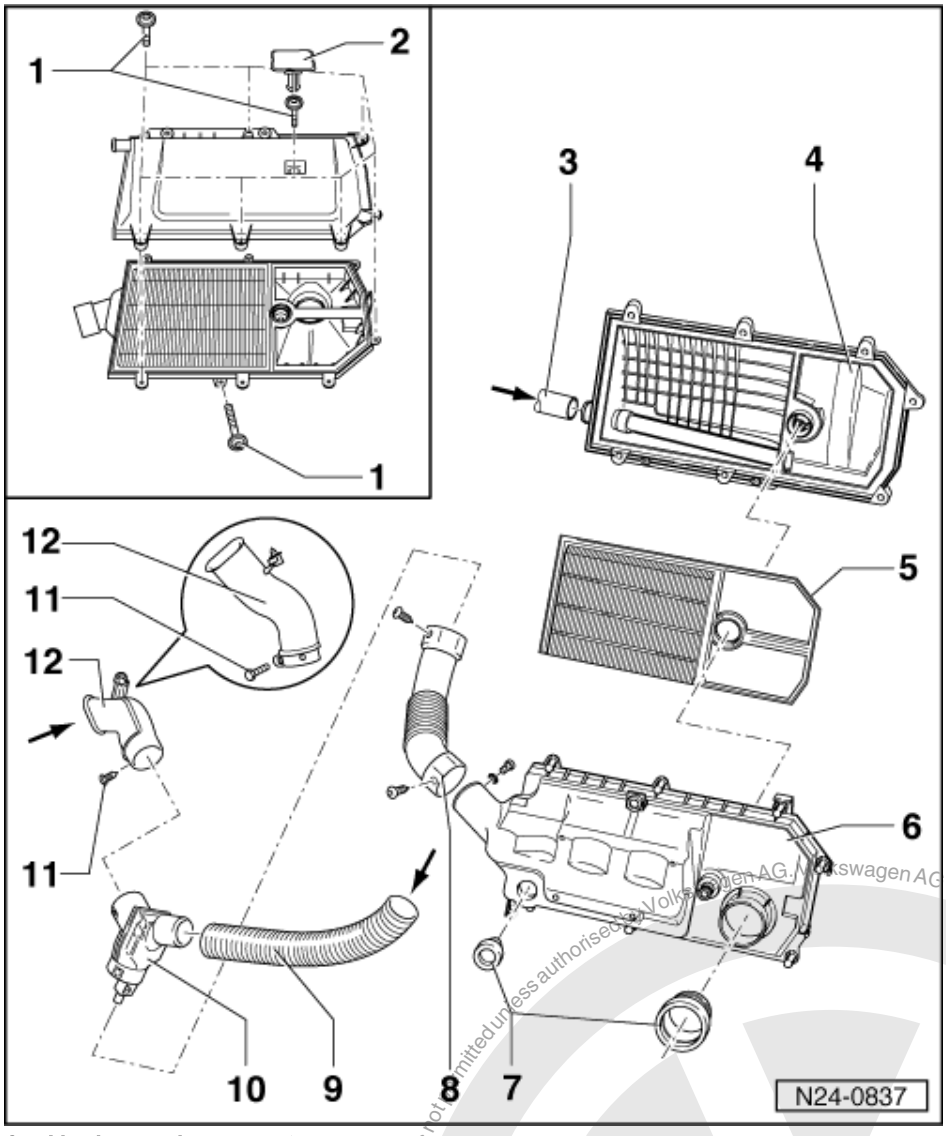

6 Air cleaner lower part
7 Seal
- Check securely seated
- Renew if damaged

8 Connecting hose
9 Warm air intake hose
- From warm air collector plate:

=> Repair group 26; Removing and installing parts of exhaust system Removing and installing parts of exhaust system

10 Air intake housing with regulating flap
- Check intake air preheating => Page 99

11 5 Nm
12 Connecting piece for cold air intake
- Additionally secured on body with retaining clip

Protected by copyright. Copying for private or commercial purposes, in part or in whole, is not permitted unless authorised by Volkswagen AG. Volkswagen AG does not guarantee or accept any liability with respect to the correctness of information in this document. Copyright by Volkswagen AG.
satelettronica

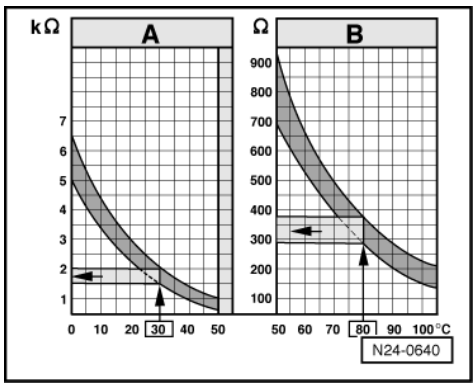

-> Fig. 1 Resistance values for coolant temperature sender (G62)

The diagram is divided into two temperature ranges:

A - From 0...50 °C
B - From 50...105 °C

Examples:

- 30 °C is in range A and corresponds to a resistance of 1.5...2.0 kω
- 80 °C is in range B and corresponds to a resistance of 275...375 ω

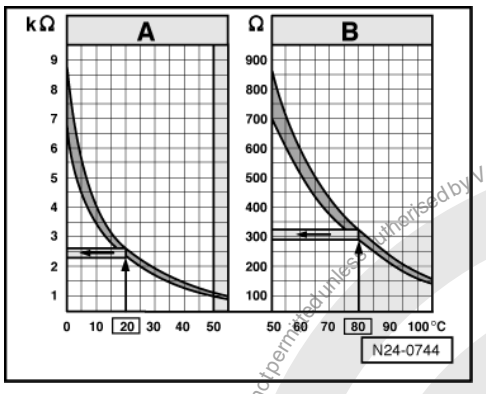

-> Fig.2 Resistance values for intake air temperature sender (G42)

The diagram is divided into two temperature ranges:

A - From 0...50 °C
B - From 50...105 °C

Examples:

- 20 °C is in range A and corresponds to a resistance of 2.3...2.6 kω
- 80 °C is in range B and corresponds to a resistance of 290...330 ω

Protected by copyright. Copying for private or commercial purposes, in part or in whole, is not permitted unless authorised by Volkswagen AG. Volkswagen AG does not guarantee or accept any liability with respect to the correctness of information in this document. Copyright by Volkswagen AG.
satelettronica

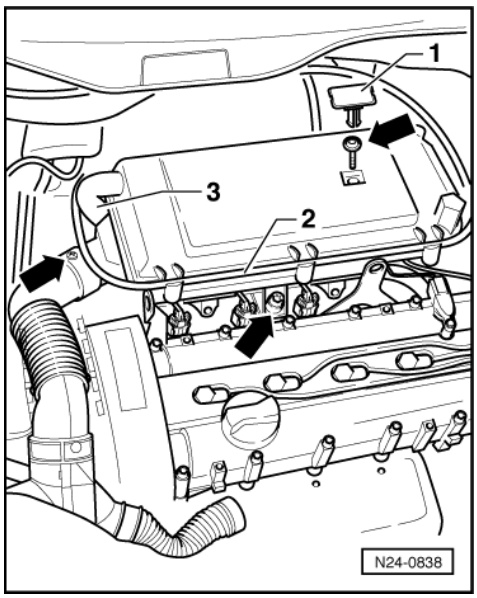

-> Fig. 3 Removing and installing air cleaner

Protected by copyright. Copyright by Volkswagen AG. Volkswagen AG does not guarantee or accept any liability with respect to the correctness of information in this document. Copyright by Volkswagen AG. Not for private or commercial purposes, in part or in whole, is not permitted unless authorised by Volkswagen AG.

satelettronica

Removing

- Remove cover above camshaft housing.
- Remove plug -1-.
- Unclip the accelerator cable -2- out of the air cleaner upper part.
- Pull crankcase breather hose -3- off air cleaner upper part.
- Loosen air cleaner at securing screws marked by arrows.
- Remove air cleaner.

Installing

- Installing the air cleaner is carried out in the reverse order.

Note:

Self-tapping screws/bolts are used to secure the air cleaner to plastic intake pipe as well as to secure the air cleaner upper part to the air cleaner lower part. When these screws/bolts are loosed or tightened using a power tool the threads in the intake manifold or the air cleaner lower part may be damaged.

For this reason the use of a power tool can only be used when:

- The power tool maximum speed is 200 rpm.
- The tightening torque is set to a maximum of 3 Nm.

1.8 - Safety precautions

Warning!
Fuel system is under pressure! Before opening the system place a cloth around the connection. Then release pressure by carefully loosening the connection.

To prevent injuries to persons and/or damage to the fuel injection and ignition system, the following must be noted:

- For safety reasons the fuse No. 40 must be removed from the fuse holder before opening the fuel system, otherwise the fuel pump can be activated by the door contact switch.
- Do not touch or disconnect ignition wiring when the engine is running or being turned at starter speed.

- The ignition must be switched off before connecting or disconnecting injection or ignition system wiring or tester cables.

Observe following if test and measuring instruments are required during a test drive:

- Test and measuring instruments must be secured to rear seat and operated by a 2nd person from this location.

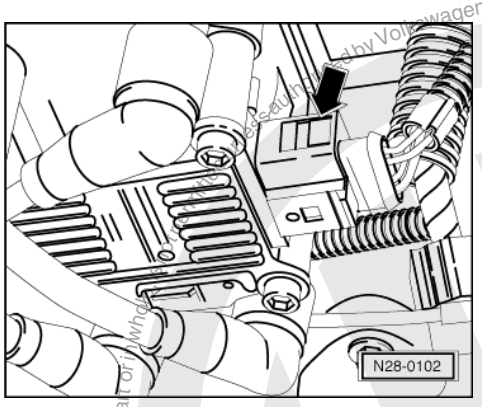

If test and measuring instruments are operated from front passenger's seat and the vehicle is involved in an accident, there is a possibility that the person sitting in this seat may receive serious injuries when the airbag is triggered.

- If the engine is to be turned at starter speed, without starting:

- -> Pull 4 pin connector off ignition transformer -arrow-.

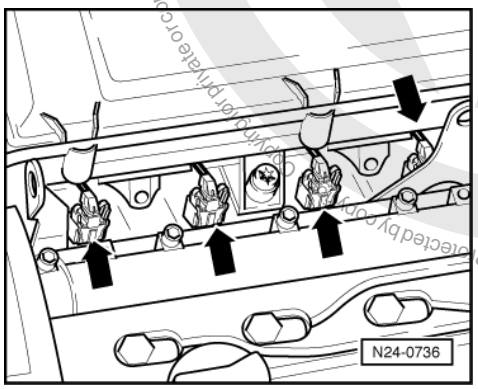

- -> Pull plug -arrows- off all injectors.

1.9 - Rules for cleanliness

When working on the fuel supply/injection system, pay careful attention to the following "5 rules":

- Thoroughly clean all unions and the adjacent areas before disconnecting.
- Place parts that have been removed on a clean surface and cover. Do not use fluffy cloths!
- Carefully cover opened components or seal, if the repair cannot be carried out immediately.
- Only install clean components:
  Only unpack replacement parts immediately prior to installation.
  Do not use parts that have been stored loose (e.g. in tool boxes etc.).
- When the system is open:
  Do not work with compressed air if this can be avoided.
  Do not move vehicle unless absolutely necessary.

Protected by copyright. Copyright by Volkswagen AG. Volkswagen AG does not guarantee or accept any liability with respect to the correctness of information in this document. Copyright by Volkswagen AG.
satelettronica

1.10 - Technical data

Engine code		AFK	AHW
Idling speed check			
Idling speed2)	rpm	790...8901)	800...9001)
Manual gearbox			630...7301)
Automatic gearbox			
Engine control unit3)			
System		4CV	4CV
Part number		=>Parts film	=>Parts film
Governed speed	rpm	from approx. 7100	from approx. 5700

1) Up-to-date specifications:

=> Exhaust emissions test binder

2) Not adjustable

3) Replacing engine control unit => Page 106

2 - Checking components

2.1 - Checking components

2.2 - Checking Lambda probe heating

Special tools, workshop equipment, testers, measuring instruments and auxiliary items required

- Hand multimeter V.A.G 1526 or multimeter V.A.G 1715
- Adapter set V.A.G 1594
- Current flow diagram

Check conditions

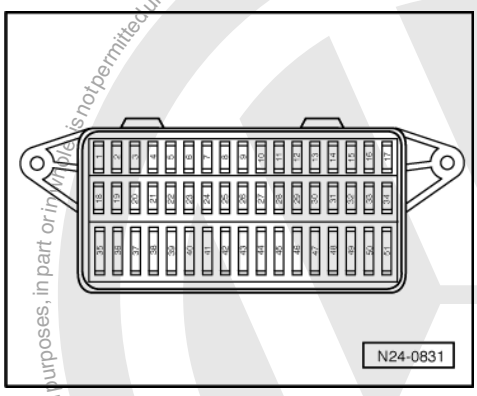

- -> Fuse No. 1 must be OK.
- The battery voltage must be at least 11.5 V.
- Fuel pump relay must be OK

satelettronica
Protected by copyright. Copying for private or commercial purposes, in part or in whole, is not permitted unless authorised by Volkswagen AG. Volkswagen AG does not guarantee or accept any liability with respect to the correctness of information in this document. Copyright by Volkswagen AG.

Test sequence

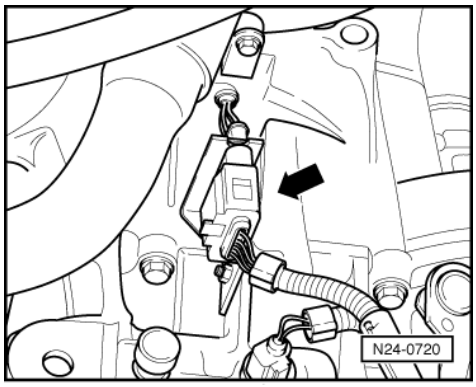

- -> Separate 4 pin connector to Lambda probe (G39) -1-.

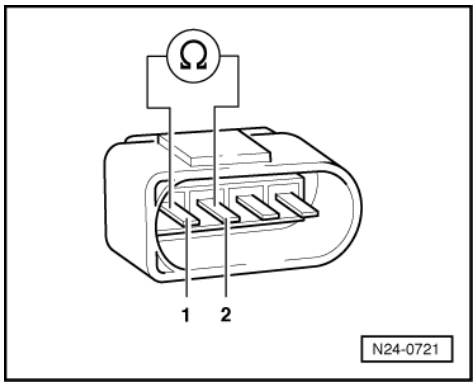

- -> Check probe heating for continuity at Lambda probe connector contacts 1 and 2.

Note:

The heater element resistance is approx. 1...5 ω at room temperature. Even slight increases in room temperature increase the resistance greatly.

If it is determined that probe heating has an open circuit:

- Renew Lambda probe (G39)
  =>Page 46 , item 15 .

If probe heating has continuity:

Checking voltage supply

- Set multimeter to "Voltage measurement" range.

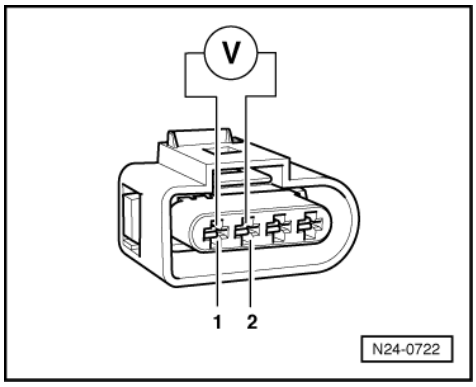

- -> Connect multimeter using aux. cables from V.A.G 1594 to measure voltage at contacts 1+2 (connector to engine control unit).

Protected by copyright. Copying for private or commercial purposes, in part or in whole, is not permitted unless authorised by Volkswagen AG. Volkswagen AG does not guarantee or accept any liability with respect to the correctness of information in this document. Copyright by Volkswagen AG.
satelettronica

- Start engine and run at idling speed.

  Specification: 11.0...15.0 V

- Switch off ignition.

If no voltage is present:

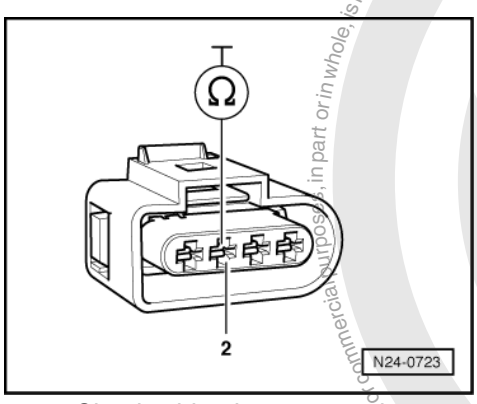

- -> Check wiring between 4 pin connector contact 2 and engine earth for open circuit
  Wire resistance: Max. 1.5 ω

If the specification is obtained:

- Check wire between 4 pin connector contact 1 and fuel pump relay (J17) for open circuit using current flow diagram.
  Wire resistance: max. 1.5 ω

2.3 - Checking throttle valve control part

Components of the throttle valve control part (J338):
Throttle valve positioner (V60), throttle valve positioner potentiometer (G88), throttle valve potentiometer (G69) and idling switch (F60)

Notes:

- Only gold-plated contacts may be used when servicing the throttle valve control part connector contacts.

If the throttle valve control part is replaced, the following must be carried out:

- Match engine control unit to the throttle valve control part => Page 108
- On vehicles with automatic gearbox: Match the gearbox control unit

=> Automatic gearbox 001 self-diagnosis; Repair group 01; performing self-diagnosis; initiating basic setting performing self-diagnosis initiating basic setting

Special tools, workshop equipment, testers, measuring instruments and auxiliary items required

- Fault reader V.A.G 1551 or vehicle system tester V.A.G 1552 with cable V.A.G 1551/3A
- Test box V.A.G 1598/22
- Hand multimeter V.A.G 1526 or multimeter V.A.G 1715
- Adapter set V.A.G 1594
- Current flow diagram

Checking idling switch

Test sequence

- Connect the fault reader V.A.G 1551 (V.A.G 1552). Then switch ignition on and select engine control unit with the "Address word" 01.

Protected by copyright. Copying for private or commercial purposes, in part or in whole, is not permitted unless authorised by Volkswagen AG. Volkswagen AG does not guarantee or accept any liability with respect to the correctness of information in this document. Copyright by Volkswagen AG.
satelettronica

(Connecting fault reader and selecting engine control unit => Page 2 .)

-> Indicated on display:

```
Rapid data transfer      HELP
Select function XX
```

- Press keys 0 and 8 for the function "Read measured value block" and confirm entry with Q key.

-> Indicated on display:

```
Read measured value block      HELP
Input display group number XXX
```

- Press keys 0, 9 and 8 for "Display group number 98" and confirm entry with Q key.

-> Indicated on display:
(1...4 = Display zones)

```
Read measured value block 98
     1     2     3     4
```

- Check the operating mode display in display zone 3.
  Display: Idling

- Slowly open throttle valve. After free travel, a stop is reached when opening throttle valve further the 4th position from left must jump to part throttle
  Display: Part throttle

Display constantly remains on one operating condition:

Display	Cause	Continuation of check
Part throttle	Open circuit or short to positive	=> Page 67
Idling	Short to earth	=> Page 68

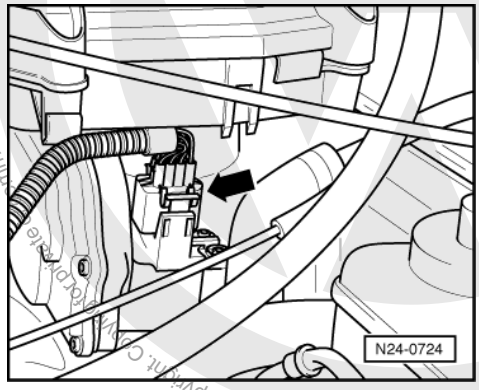

Continuation of check when display constantly shows part throttle

- -> Pull 8 pin connector off throttle valve control part -arrow-.

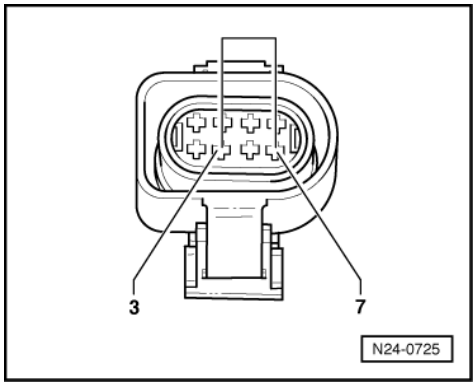

Copyright by Volkswagen AG. Volkswagen AG does not guarantee or accept any liability with respect to the correctness of information in this document. Copyright by Volkswagen AG. Volkswagen AG does not authorise the use of this document for commercial purposes, in part or in whole, is not permitted.
satelettronica

- -> Bridge connector contacts 3+7 with aux. cables from V.A.G 1594 and observe display.

If display jumps to idling:

- Press the ⇒key.
- Press keys 0 and 6 for the function "End output" and confirm entry with the Q key.
- Switch off ignition.
- Replace throttle valve control part
  =>Page 53 , item 1 .

If display remains on idling:

- Press the ⇒key.
- Press keys 0 and 6 for the function "End output" and confirm entry with the Q key.
- Switch off ignition.
- Check voltage supply of throttle valve control part and wiring to control unit => Page 73 .

If the voltage supply and wiring is OK:

- Replace engine control unit
  => Page 106 .

Continuation of check when display constantly shows idling

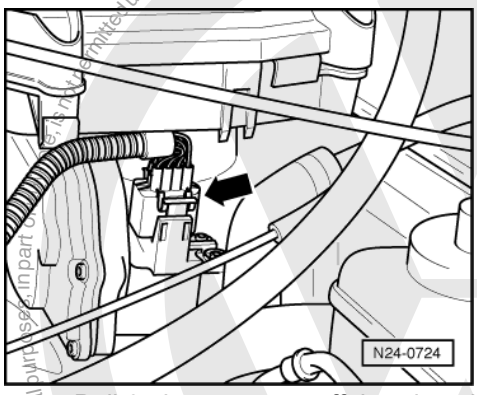

- -> Pull 8 pin connector off throttle valve control part -arrow-.

If display jumps to part throttle:

- Press the ⇒key.
- Press keys 0 and 6 for the function "End output" and confirm entry with the Q key.
- Switch off ignition.
- Replace throttle valve control part
  =>Page 53 , item 1 .

If display remains on part throttle:

- Press the ⇒key.
- Press keys 0 and 6 for the function "End output" and confirm entry with the Q key.
- Switch off ignition.
- Check voltage supply of throttle valve control part and wiring to control unit => Page 73 .

If the voltage supply and wiring is OK:

- Replace engine control unit
  => Page 106 .

Protected by copyright. Copyright by Volkswagen AG. Volkswagen AG does not guarantee or accept any liability with respect to the correctness of information in this document. Copyright by Volkswagen AG.
satelettronica

Checking throttle valve positioner and throttle valve positioner potentiometer

Test conditions

- Coolant temperature must be at least 80 °C, =>display group 1, display zone 2.

Test sequence

- Connect fault reader V.A.G 1551 (V.A.G 1552). Start engine and select "Address word" 01 of engine control unit. When doing this the engine must be running at idling speed.
  (Connecting fault reader and selecting engine control unit => Page 2 .)

-> Indicated on display:

```
Rapid data transfer      HELP
Select function XX
```

- Press keys 0 and 8 for the function "Read measured value block" and confirm entry with Q key.

-> Indicated on display:

```
Read measured value block      HELP
Input display group number XXX
```

- Press keys 0, 0 and 1 for "Display group number 1" and confirm entry with Q key.

-> Indicated on display:
(1...4 = Display zones)

```
Read measured value block      1
     1      2      3      4
```

- Check whether the coolant temperature is above 80 °C in display zone 2.
- Change to display group 98 as follows:
- Press C key.

-> Indicated on display:

```
Read measured value block      HELP
Input display group number XXX
```

- Press keys 0, 9 and 8 for "Display Group 98" and confirm entry by pressing Q.

-> Indicated on display:
(1...4 = Display zones)

```
Read measured value block 98
     1      2      3      4
```

- Check voltage value from throttle valve positioner sender in display zone 2. The voltage must be between 0.500...5.000 V

If the specification is not obtained:

- Press the ⇒key.
- Press keys 0 and 6 for the function "End output" and confirm entry with the Q key.
- Switch off ignition.

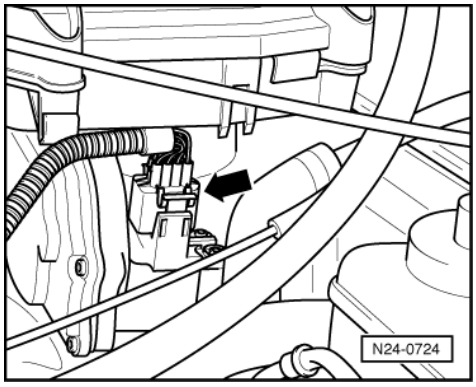

Protected by copyright. Copying for private or commercial purposes, in part or in whole, is not permitted unless authorised by Volkswagen AG. Volkswagen AG does not guarantee or accept any liability with respect to the correctness of information in this document. Copyright by Volkswagen AG.
satelettronica

- -> Pull 8 pin connector off throttle valve control part -arrow-.

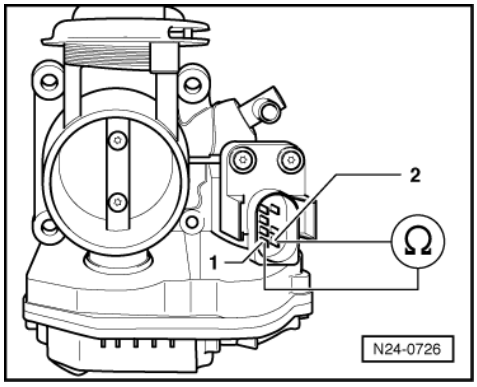

- -> Measure throttle valve positioner resistance between connector contacts 1+2.
  Specification: 3...200 ω

If the specification is not obtained:

- Replace throttle valve control part
  =>Page 53 , item 1 .

If the specification is obtained:

- Check voltage supply of throttle valve control part and wiring to control unit => Page 73 .

Checking throttle valve potentiometer

Test conditions

- Coolant temperature must be at least 80 °C, =>display group 1, display zone 2.

Test sequence

- Connect the fault reader V.A.G 1551 (V.A.G 1552). Then switch ignition on and select engine control unit with the "Address word" 01.
  (Connecting fault reader and selecting engine control unit => Page 2 .)

-> Indicated on display:

```
Rapid data transfer      HELP
Select function XX
```

- Press keys 0 and 8 for the function "Read measured value block" and confirm entry with Q key.

-> Indicated on display:

```
Read measured value block      HELP
Input display group number XXX
```

- Press keys 0, 0 and 1 for "Display group number 1" and confirm entry with Q key.

-> Indicated on display:
(1...4 = Display zones)

```
Read measured value block      1
     1     2     3     4
```

- Check whether the coolant temperature is above 80 °C in display zone 2.
- Change to display group 3 as follows:
  V.A.G 1551: Press key 3 twice
  V.A.G 1552: Press key ↑ twice

-> Indicated on display:

Protected by copyright. Copyright by Volkswagen AG. Copyright by Volkswagen AG. Volkswagen AG does not guarantee or accept any liability with respect to the correctness of information in this document. Copyright by Volkswagen AG. Copying for private or commercial purposes, in part or in whole, is not permitted unless authorised by Volkswagen AG.
satelettronica

(1...4 = Display zones)

```
Read measured value block 3
     1     2     3     4
```

- Read off throttle valve angle in display zone 3.
  Engine code AFK:
  Throttle valve in start position: 0...4 <°
  Engine code AHW:
  Throttle valve in start position: 0...7 <°
- Slowly open throttle valve slowly until fully open and observe angle display in display zone 3. The figure must increase uniformly over
  the complete range
  up to a min. 75 <°.
- Press the ⇒key.
- Press keys 0 and 6 for the function "End output" and confirm entry with the Q key.
- Switch off ignition.

Note:

The displayed figure is dependent on the tolerances of the throttle valve potentiometer and does not correspond to the actual opening angle.

If the figure does not increase uniformly:

- Replace throttle valve control part
  =>Page 39 , item 7 .

If the display constantly shows 0 <° or is above 90 <°:

Display	Cause	Continuation of check
0 <°	Open circuit or short to positive	=> Page 71
above 90 <°	Short to earth	=> Page 72

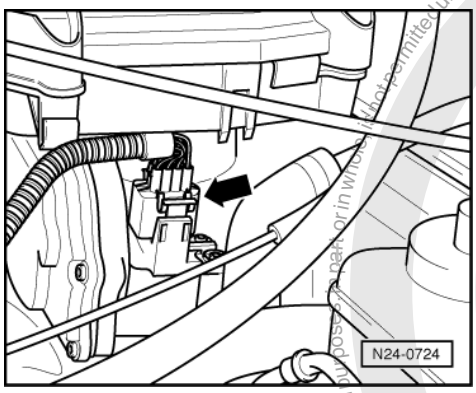

Continuation of check when display shows 0 <°:

- -> Pull 8 pin connector off throttle valve control part -arrow-.

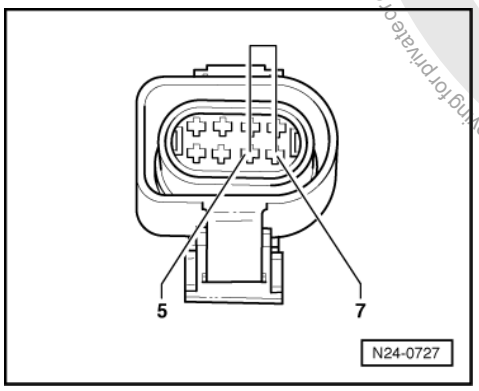

Protected by copyright. Copying for private or commercial purposes, in part or in whole, is not permitted unless authorised by Volkswagen AG. Volkswagen AG does not guarantee or accept any liability with respect to the correctness of information in this document. Copyright by Volkswagen AG.
satelettronica

- -> Bridge connector contacts 5+7 with auxiliary cables from V.A.G 1594 and observe display.

If display jumps above 90 <°:

- Press ⇒key.
- Press keys 0 and 6 for the function "End output" and confirm entry with the Q key.
- Switch off ignition.
- Replace throttle valve control part (J338).

If display remains at 0 <°:

- Press ⇒key.
- Press keys 0 and 6 for the function "End output" and confirm entry with the Q key.
- Switch off ignition.
- Check voltage supply of throttle valve control part and wiring to control unit => Page 73 .

If the voltage supply and wiring is OK:

- Replace engine control unit
  => Page 106 .

Continuation of check when display is above 90 <°:

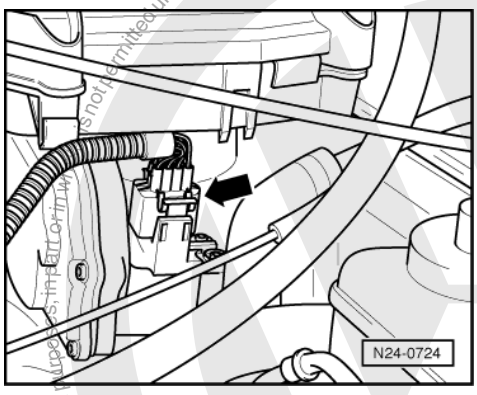

- -> Pull 8 pin connector off throttle valve control part -arrow-.

If display jumps to 0 <°:

- Press ⇒key.
- Press keys 0 and 6 for the function "End output" and confirm entry with the Q key.
- Switch off ignition.
- Replace throttle valve control part (J338).

If display remains above 90 <°:

- Press ⇒key.
- Press keys 0 and 6 for the function "End output" and confirm entry with the Q key.
- Switch off ignition.
- Check voltage supply of throttle valve control part and wiring to control unit => Page 73 .

If the voltage supply and wiring is OK:

- Replace engine control unit
  => Page 106 .

Copyright by Volkswagen AG. Volkswagen AG does not guarantee or accept any liability with respect to the correctness of information in this document. Copyright by Volkswagen AG. Protected by copyright. Copying for private or commercial purposes, in part or in whole, is not permitted unless authorised by Volkswagen AG.
satelettronica

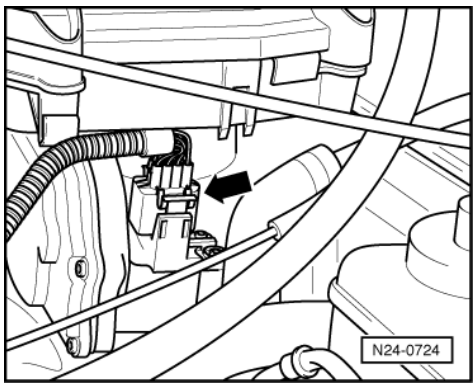

Checking voltage supply and wiring to control unit

Test conditions

- The battery voltage must be at least 11.5 V.

Test sequence

- -> Pull 8 pin connector off throttle valve control part -arrow-.

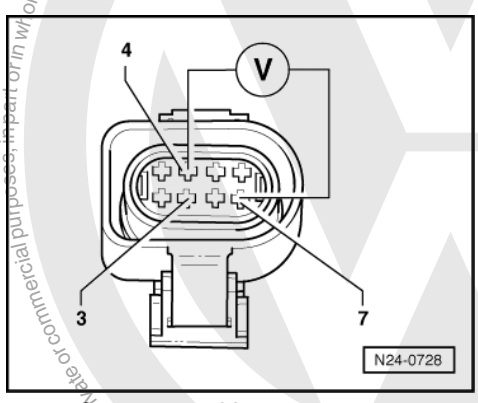

- -> Connect multimeter to measure voltage using aux. cables from V.A.G 1594 to connector contacts 4+7.
- Switch on ignition.
  Specification: min. 4.5 V
- Switch off ignition.
- Connect multimeter to measure voltage at connector contacts 3+7.
- Switch on ignition.
  Specification: min. 9.0 V
- Switch off ignition.

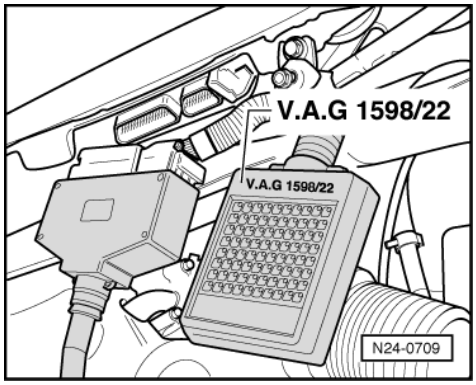

satelettronica

If no voltage is present:

- -> Connect test box V.A.G 1598/22 to control unit wiring harness.

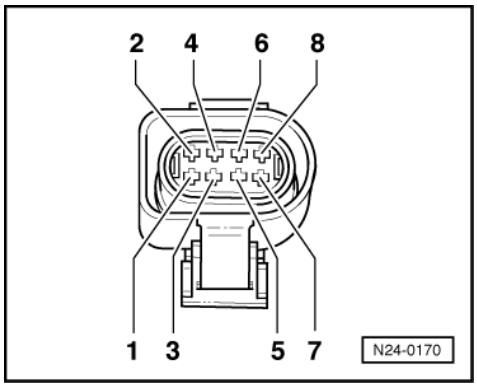

- -> Check wiring between test box and connector for open circuit using current flow diagram.
  Contact 1+socket 66
  Contact 2+socket 59
  Contact 3+socket 69
  Contact 4+socket 64
  Contact 5+socket 75
  Contact 7+socket 67
  Contact 8+socket 74
  Wire resistance: Max. 1.5 ω
- Additionally check wires for short to one another.
  Specification: ∞ω

If no wiring fault is detected:

- Check voltage supply of engine control unit => Page 104 .

2.4 - Checking intake manifold pressure sender

Note:

Only gold-plated contacts may be used when servicing the sender connector contacts

Special tools, workshop equipment, testers, measuring instruments and auxiliary items required

- Fault reader V.A.G 1551 or vehicle system tester V.A.G 1552 with cable V.A.G 1551/3A
- Test box V.A.G 1598/22
- Hand multimeter V.A.G 1526 or multimeter V.A.G 1715
- Adapter set V.A.G 1594
- Current flow diagram

Test sequence

- Connect fault reader V.A.G 1551 (V.A.G 1552). Start engine and select "Address word" 01 of engine control unit. When doing this the engine must be running at idling speed.
  (Connecting fault reader and selecting engine control unit => Page 2 .)

-> Indicated on display:

```
Rapid data transfer      HELP
Select function XX
```

- Press keys 0 and 8 for the function "Read measured value block" and confirm entry with Q key.

-> Indicated on display:

Protected by copyright. Copyright by Volkswagen AG.
Copyright by Volkswagen AG. Volkswagen AG does not guarantee or accept any liability with respect to the correctness of information in this document. Copyright by Volkswagen AG. Reproduction, in part or in whole, is not permitted without authorised by Volkswagen AG. Volkswagen AG does not guarantee or accept any liability with respect to the correctness of information in this document. Copyright by Volkswagen AG.
satelettronica

```
Read measured value block     HELP
Input display group number XXX
```

- Press keys 0, 0 and 3 for "Display group number 3" and confirm entry with Q key.

-> Indicated on display:
(1...4 = Display zones)

```
Read measured value block 3
     1     2     3     4
```

- Read off the displayed value for engine load in display zone 2 and note this value.
- Briefly open throttle valve. The engine load value must increase briefly.

If the display shows constantly 0 % or 99 %:

Display	Cause	Continuation of check
0 %	Open circuit or short to earth	=> Page 75
99 %	Short to positive	=> Page 76

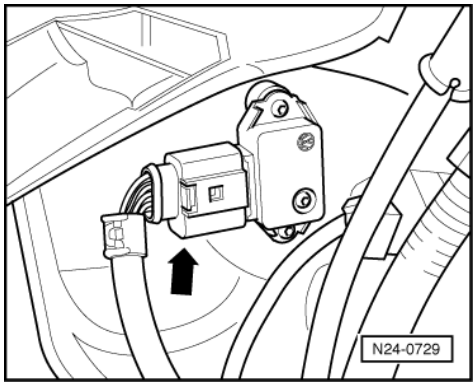

Continuation of check when display 0%:

- -> Pull 4 pin connector off intake manifold pressure sender (G71) with intake air temperature sender (G42) -arrow- (engine can stall).

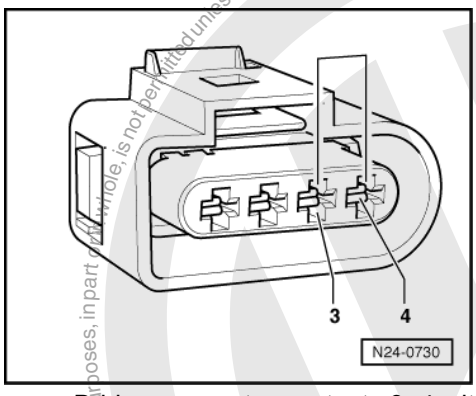

- -> Bridge connector contacts 3+4 with aux. cables from V.A.G 1594 and observe display.

If the display jumps to 99 %:

- Press ⇒key.
- Press keys 0 and 6 for the function "End output" and confirm entry with the Q key.
- Switch off ignition.
- Renew the intake manifold pressure sender (G71) with intake air temperature sender (G42)

satelettronica

=> Page 55 , item 11 .

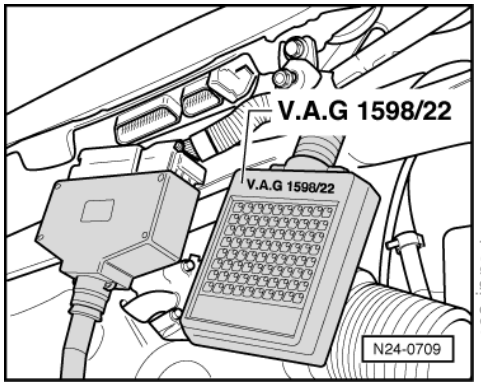

If the display remains at 0 %:

- Press ⇒key.
- Press keys 0 and 6 for the function "End output" and confirm entry with the Q key.
- Switch off ignition.
- -> Connect test box V.A.G 1598/22 to control unit wiring harness.

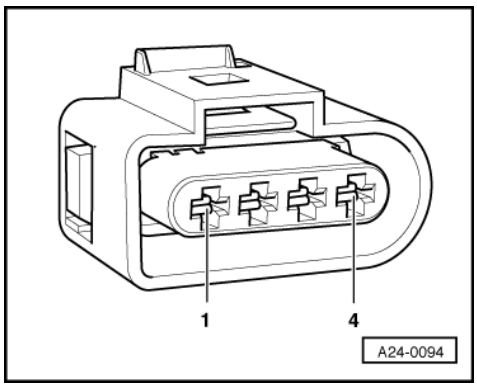

- -> Check wiring between test box and connector for open circuit using current flow diagram.
  Contact 3+socket 62
  Contact 4+socket 61
  Wire resistance: Max. 1.5 ω
- Additionally check wiring contact 4 for short to earth and to contact 1.
  Specification: ∞ω

If no wiring fault is detected:

- Replace engine control unit
  => Page 106 .

Continuation of check when display shows 99 %:

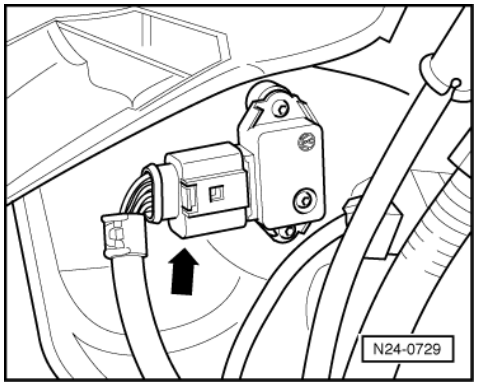

Protected by copyright. Copyright by Volkswagen AG. Volkswagen AG does not guarantee or accept any liability with respect to the correctness of information in this document. Copying for private or commercial purposes, in part or in whole, is not permitted unless authorised by Volkswagen AG.
satelettronica

- -> Pull 4 pin connector off intake manifold pressure sender (G71) with intake air temperature sender (G42) -arrow- (engine can stall).

If the display jumps to 0 %:

- Press ⇒key.
- Press keys 0 and 6 for the function "End output" and confirm entry with the Q key.
- Switch off ignition.
- Renew the intake manifold pressure sender (G71) with intake air temperature sender (G42) => Page 55 , item 11 .

If the display remains at 99 %:

- Press the ⇒key.
- Press keys 0 and 6 for the function "End output" and confirm entry with the Q key.
- Switch off ignition.

- Release connector from control unit and pull off.

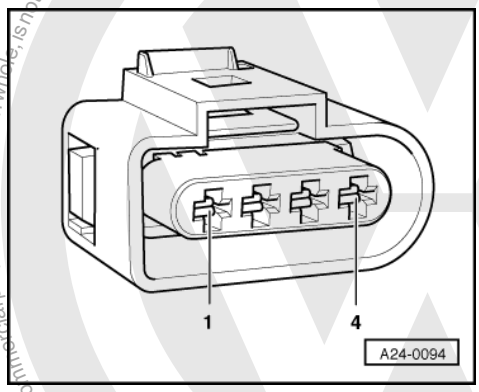

- -> Check wiring to control unit connector at 4 pin connector contact 4 for short to wire contact 3 and to battery positive.
  Specification: ∞ω

If no wiring fault is detected:

- Replace engine control unit => Page 106 .

2.5 - Checking intake air temperature sender

Note:

Only gold-plated contacts may be used when servicing the sender connector contacts

Special tools, workshop equipment, testers, measuring instruments and auxiliary items required

- Fault reader V.A.G 1551 or vehicle system tester V.A.G 1552 with cable V.A.G 1551/3A
- Test box V.A.G 1598/22
- Hand multimeter V.A.G 1526 or multimeter V.A.G 1715
- Adapter set V.A.G 1594
- Current flow diagram
- Chilling spray (commercially available)

Test sequence

- Connect the fault reader V.A.G 1551 (V.A.G 1552). Then switch ignition on and select engine control unit with the "Address word" 01.

Protected by copyright. Copying for private or commercial purposes, in part or in whole, is not permitted unless authorised by Volkswagen AG. Volkswagen AG does not guarantee or accept any liability with respect to the correctness of information in this document. Copyright by Volkswagen AG.
satelettronica

(Connecting fault reader and selecting engine control unit => Page 2 .)

-> Indicated on display:

```
Rapid data transfer      HELP
Select function XX
```

- Press keys 0 and 8 for the function "Read measured value block" and confirm entry with Q key.

-> Indicated on display:

```
Read measured value block      HELP
Input display group number XXX
```

- Press keys 0, 0 and 2 for "Display group number 2" and confirm entry with Q key.

-> Indicated on display:
(1...4 = Display zones)

```
Read measured value block 2
     1     2     3     4
```

- Read off intake air temperature value in display zone 4.

Display	Cause	Continuation of check
-40 °C	Open circuit or short to positive	=> Page 78
120 °C	Short to earth	=> Page 80
Approx. ambient temperature1)	---	=> Page 81

1) If a temperature is displayed which is below the ambient air temperature of the sender, check sender wiring for transfer resistances. Note when doing this that sender is heated from external sources, e.g. radiated heat when engine is not running.

Continuation of check when display -40 °C:

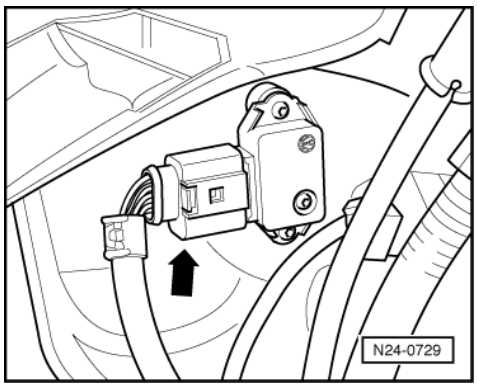

- -> Pull 4 pin connector off intake air temperature sender (G42) with intake manifold pressure sender (G71) -arrow-.

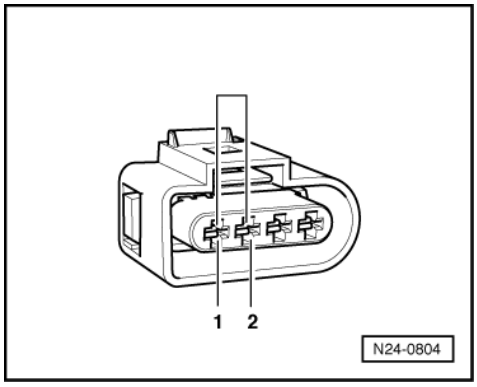

Protected by copyright. Copying for private or commercial purposes, in part or in whole, is not permitted unless authorised by Volkswagen AG. Volkswagen AG does not guarantee or accept any liability with respect to the correctness of information in this document. Copyright by Volkswagen AG.
satelettronica

- -> Bridge connector contacts 1+2 using aux. cables from V.A.G 1594 and observe display.

If the display jumps to 120 °C:

- Press ⇒key.
- Press keys 0 and 6 for the function "End output" and confirm entry with the Q key.
- Switch off ignition.
- Renew the intake manifold pressure sender (G71) with intake air temperature sender (G42)
  => Page 55 , item 11 .

If the display remains at -40 °C:

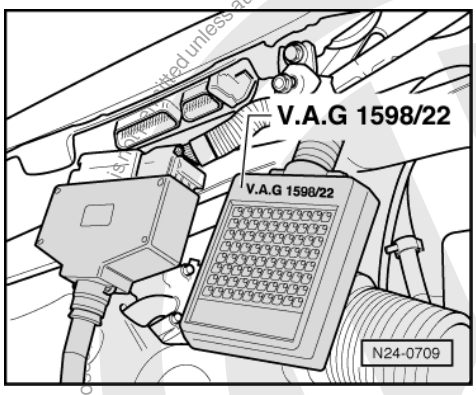

- Press ⇒key.
- Press keys 0 and 6 for the function "End output" and confirm entry with the Q key.
- Switch off ignition.
- -> Connect test box V.A.G 1598/22 to control unit wiring harness.

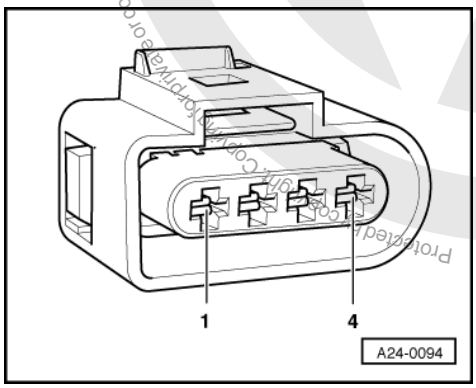

- -> Check the wiring between test box and 4 pin connector -1- for open circuit using current flow diagram.
  Contact 1+socket 67
  Contact 2+socket 54
  Wire resistance: Max. 1.5 ω
- Check wiring additionally for short circuit to battery positive.
  Specification: ∞ω

If no wiring fault is detected:

- Renew the intake manifold pressure sender (G71) with intake air temperature sender (G42)
  => Page 55 , item 11 .

Protected by copyright. Copyright by Volkswagen AG. Volkswagen AG does not guarantee or accept any liability with respect to the correctness of information in this document. Copyright by Volkswagen AG.
satelettronica

Continuation of check when display shows 120 °C:

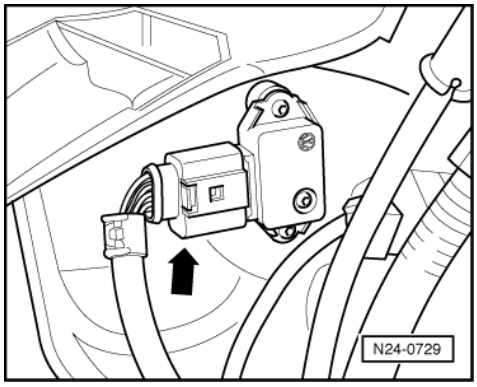

- -> Pull 4 pin connector off intake air temperature sender (G42) with intake manifold pressure sender (G71) -arrow-.

If the display jumps to -40 °C:

- Press ⇒key.
- Press keys 0 and 6 for the function "End output" and confirm entry with the Q key.
- Switch off ignition.
- Renew the intake manifold pressure sender (G71) with intake air temperature sender (G42) => Page 55 , item 11 .

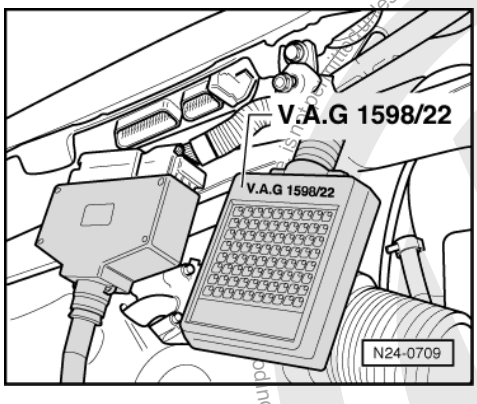

If the display remains at 120 °C:

- Press ⇒key.
- Press keys 0 and 6 for the function "End output" and confirm entry with the Q key.
- Switch off ignition.
- -> Connect test box V.A.G 1598/22 to control unit wiring harness.

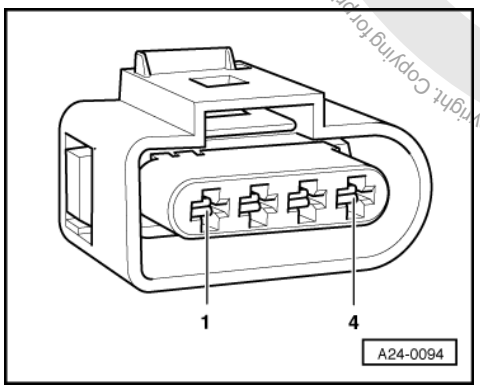

- -> Check the wiring between test box and 4 pin connector -1- for open circuit using current flow diagram.
  Contact 1+socket 67
  Contact 2+socket 54
  Wire resistance: Max. 1.5ω

Protected by copyright. Copyright by Volkswagen AG.
Copyright by Volkswagen AG. Volkswagen AG does not guarantee or accept any liability with respect to the correctness of information in this document. Copying for private or commercial purposes, in part or in whole, is not permitted unless authorised by Volkswagen AG.
satelettronica

- Check wiring additionally for short circuit to battery positive.
  Specification: ∞ω

If no wiring fault is detected:

- Renew the intake manifold pressure sender (G71) with intake air temperature sender (G42)
  => Page 55 , item 11 .

Continuation of check when display = ambient temperature:

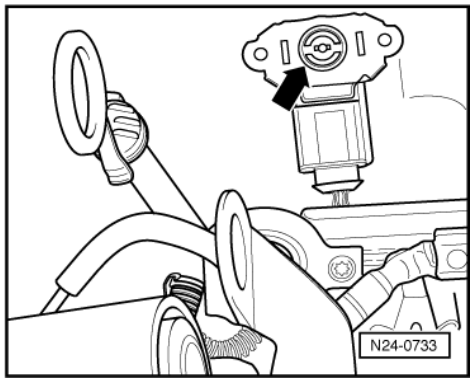

Functional check of sender

- Remove air cleaner => Page 62 , Fig. 3 .
- -> Remove intake air temperature sender together with intake manifold pressure sender (connector remains connected).
- Note intake air temperature value in display zone 4.
- Spray sender with commercial chilling agent whilst observing the temperature value. The temperature value must
  decrease.
- Press ⇒key.
- Press keys 0 and 6 for the function "End output" and confirm entry with the Q key.
- Switch off ignition.

If the specification is not obtained:

- Renew the intake manifold pressure sender (G71) with intake air temperature sender (G42)
  => Page 55 , item 11 .

2.6 - Checking coolant temperature sender

Special tools, workshop equipment, testers, measuring instruments and auxiliary items required

- Fault reader V.A.G 1551 or vehicle system tester V.A.G 1552 with cable V.A.G 1551/3A
- Test box V.A.G 1598/22
- Hand multimeter V.A.G 1526 or multimeter V.A.G 1715
- Adapter set V.A.G 1594
- Current flow diagram

Test sequence

- Connect the fault reader V.A.G 1551 (V.A.G 1552). Then switch ignition on and select engine control unit with the "Address word" 01.
  (Connecting fault reader and selecting engine control unit => Page 2 .)

-> Indicated on display:

```
Rapid data transfer      HELP
Select function XX
```

satelettronica
Protected by copyright. Copying for private or commercial purposes, in part or whole is not permitted unless authorised by Volkswagen AG. Volkswagen AG does not guarantee or accept any liability with respect to the correctness of information in this document. Copyright by Volkswagen AG.

- Press keys 0 and 8 for the function "Read measured value block" and confirm entry with Q key.

-> Indicated on display:

```
Read measured value block     HELP
Input display group number XXX
```

- Press keys 0, 0 and 1 for "Display group number 1" and confirm entry with Q key.

-> Indicated on display:
(1...4 = Display zones)

```
Read measured value block     1
     1     2     3     4
```

- Note coolant temperature value in display zone 2.

Display	Cause	Continuation of check
-40 °C	Open circuit or short to positive	=> Page 82
120 °C	Short to earth	=> Page 84
Approx. coolant temperature1)	---	Only if sporadic faults have been detected:2) => Page 85

1) If a temperature is displayed which deviates greatly from the ambient temperature of the sender, check sender wiring for transfer resistances.

2) Check is only possible when the engine is cold.

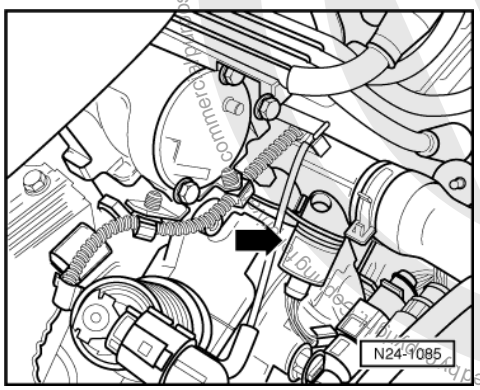

Continuation of check when display shows -40 °C:

- -> Pull the 4 pin connector off coolant temperature sender (G62) with coolant temperature gauge sender (G2) -arrow-.

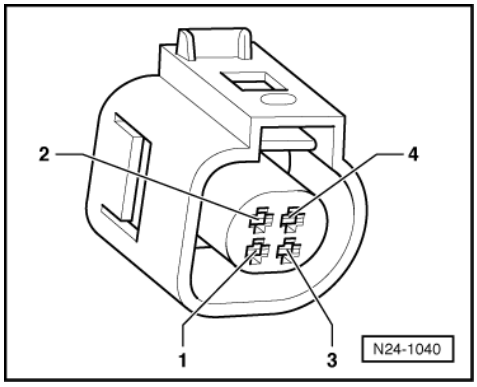

Protected by Copyright. Copyright by Volkswagen AG. Volkswagen AG does not guarantee or accept any liability with respect to the correctness of information in this document. Copying for private or commercial purposes, in part or in whole, is not permitted unless authorised by Volkswagen AG.
satelettronica

- -> Bridge connector contacts 3+4 using adapter cables from V.A.G 1594 and observe display.

If the display jumps to 120 °C:

- Press ⇒key.
- Press keys 0 and 6 for the function "End output" and confirm entry with the Q key.
- Switch off ignition.
- Replace coolant temperature sender (G62) with coolant temperature gauge sender (G2) =>Page 47 , item 21 .

If the display remains at -40 °C:

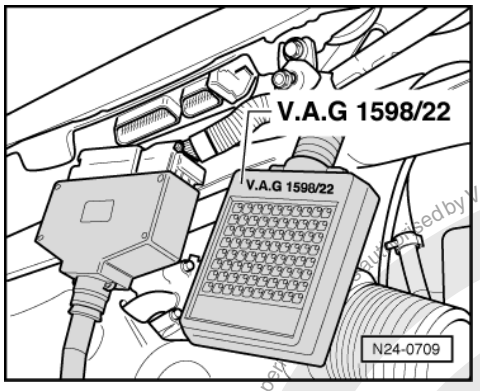

- Press ⇒key.
- Press keys 0 and 6 for the function "End output" and confirm entry with the Q key.
- Switch off ignition.
- -> Connect test box V.A.G 1598/22 to control unit wiring harness.

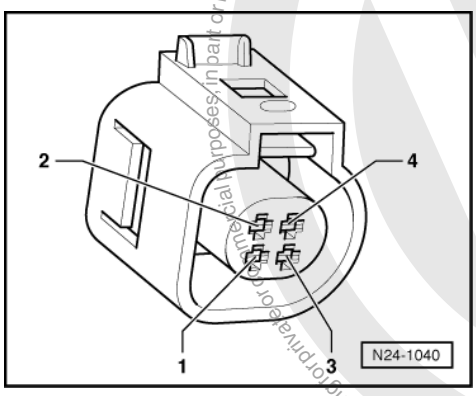

- -> Check the wiring between test box and 4 pin connector for open circuit using current flow diagram.
  Contact 3+socket 53
  Contact 4+socket 67
  Wire resistance: Max. 1.5 ω
- Check wiring additionally for short circuit to battery positive.
  Specification: ∞ω

If no wiring fault is detected:

- Replace coolant temperature sender (G62) with coolant temperature gauge sender (G2) =>Page 47 , item 21 .

satelettronica

Protected by copyright. Copyright by Volkswagen AG. Volkswagen AG does not guarantee or accept any liability with respect to the correctness of information in this document. Copying for private or commercial purposes, in whole or in part, is not permitted unless authorised by Volkswagen AG.

Continuation of check when display shows 120 °C:

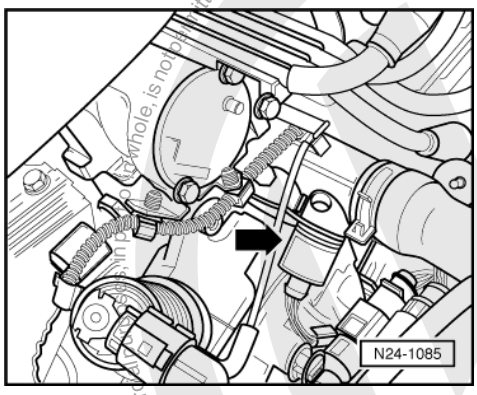

- -> Pull the 4 pin connector off coolant temperature sender (G62) with coolant temperature gauge sender (G2) -arrow-.

If the display jumps to -40 °C:

- Press ⇒key.
- Press keys 0 and 6 for the function "End output" and confirm entry with the Q key.
- Switch off ignition.
- Replace coolant temperature sender (G62) with coolant temperature gauge sender (G2) =>Page 47 , item 21 .

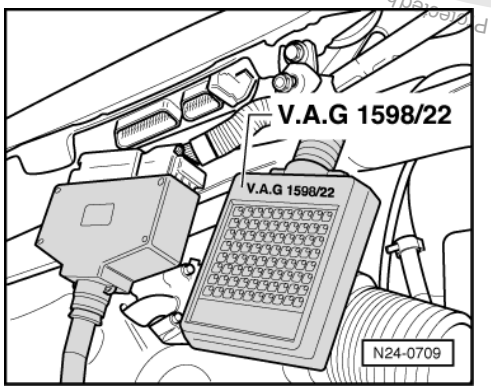

If the display remains at 120 °C:

- Press ⇒key.
- Press keys 0 and 6 for the function "End output" and confirm entry with the Q key.
- Switch off ignition.
- -> Connect test box V.A.G 1598/22 to control unit wiring harness.

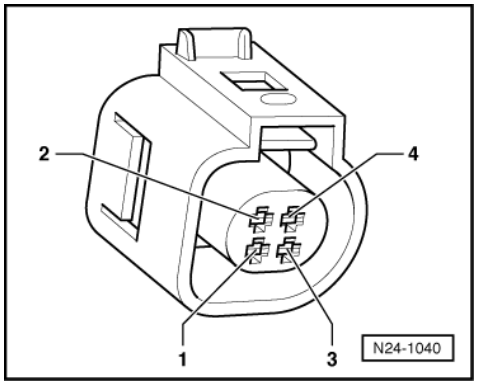

- -> Check the wiring between test box and 4 pin connector for open circuit using current flow diagram.
  Contact 3+socket 53
  Contact 4+socket 67
  Wire resistance: Max. 1.5 ω

satelettronica

- Check wiring additionally for short circuit to battery positive.
  Specification: ∞ω

If no wiring fault is detected:

- Replace coolant temperature sender (G62) with coolant temperature gauge sender (G2) =>Page 47 , item 21 .

Continuation of check when display = coolant temperature:

Test conditions

- Engine must be cold.

Functional check of sender

- Connect fault reader V.A.G 1551 (V.A.G 1552). Start engine and select "Address word" 01 of engine control unit. When doing this the engine must be running at idling speed.
  (Connecting fault reader and selecting engine control unit => Page 2 .)

-> Indicated on display:

```
Rapid data transfer     HELP
Select function XX
```

- Press keys 0 and 8 for the function "Read measured value block" and confirm entry with Q key.

-> Indicated on display:

```
Read measured value block     HELP
Input display group number XXX
```

- Press keys 0, 0 and 1 for "Display group number 1" and confirm entry with Q key.

-> Indicated on display:
(1...4 = Display zones)

```
Read measured value block     1
        1      2      3      4
```

- Observe coolant temperature value in display zone 2, whilst engine is running. The temperature figure must increase uniformly and without interruption.

Notes:

- If the display on fault reader jumps by 2...5 °C, it is a control unit fault and not caused by a defective sender.
- If irregular engine running occurs in certain temperature ranges and the temperature figure does not increase without interruption, the temperature signal is temporarily interrupted and the sender must be renewed.

- Press ⇒key.
- Press keys 0 and 6 for the function "End output" and confirm entry with the Q key.
- Switch off ignition.

If the specification is not obtained:

- Replace coolant temperature sender (G62) with coolant temperature gauge sender (G2) =>Page 47 , item 21 .

Protected by copyright. Copying for private or commercial purposes, in part or in whole, is not permitted unless authorised by Volkswagen AG. Volkswagen AG does not guarantee or accept any liability with respect to the correctness of information in this document. Copyright by Volkswagen AG.
satelettronica

2.7 - Checking engine speed sender

The engine speed sender (G28) is a speed and reference mark sender. If the speed signal fails when the engine is running, it can cause the engine to stall.

Special tools, workshop equipment, testers, measuring instruments and auxiliary items required

- Test box V.A.G 1598/22
- Hand multimeter V.A.G 1526 or multimeter V.A.G 1715
- Adapter set V.A.G 1594
- Current flow diagram

Test conditions

- The battery voltage must be at least 11.5 V.

Test sequence

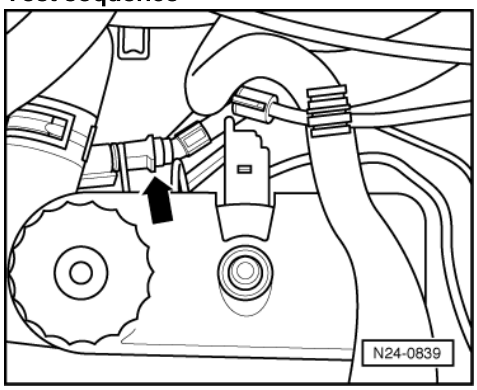

- -> Detach black 3-pin connector to engine speed sender -arrow- (on thermostat housing).

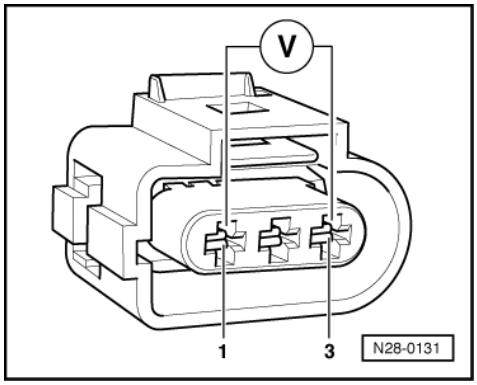

- -> Connect multimeter to measure voltage using aux. cables from V.A.G 1594 to contacts 1 (positive) and 3 (earth) on engine speed sender connector.
- Switch on ignition.
  Specification: min. 4.5 V
- Switch off ignition.

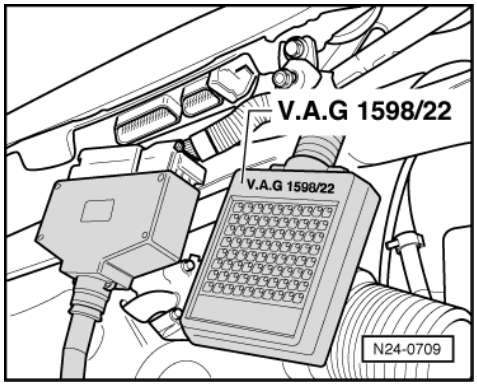

Protected by copyright. Copying for private or commercial purposes, in part or in whole, is not permitted unless authorised by Volkswagen AG. Volkswagen AG does not guarantee or accept any liability with respect to the correctness of information in this document. Copyright by Volkswagen AG.
satelettronica

If no voltage is present:

- -> Connect test box V.A.G 1598/22 to control unit wiring harness.

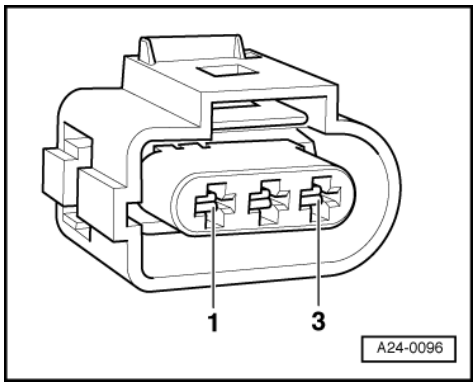

- -> Check wiring between test box and 3 pin connector for open circuit using current flow diagram.
  Contact 1+socket 56
  Contact 2+socket 63
  Contact 3+socket 67
  Wire resistance: Max. 1.5 ω
- Additionally check wires for short to one another.
  Specification: ∞ω

If no wiring fault is detected and voltage was present between contacts 1+3:

- Replace engine speed sender (G28)
  =>Page 39 , item 9 .

If no wiring fault is detected and no voltage was present between contacts 1+3:

- Replace engine control unit
  => Page 106 .

2.8 - Checking injectors

Checking activation

Special tools, workshop equipment, testers, measuring instruments and auxiliary items required

- Test box V.A.G 1598/22
- Hand multimeter V.A.G 1526 or multimeter V.A.G 1715
- Diode test lamp V.A.G 1527
- Adapter set V.A.G 1594

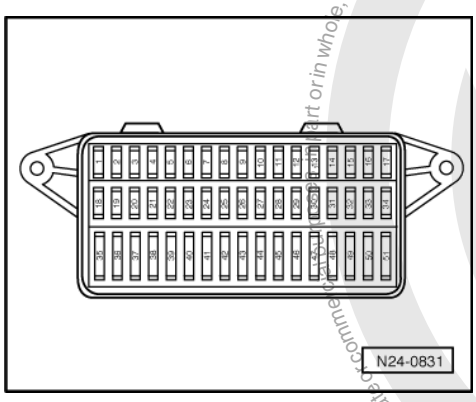

- Current flow diagram

Protected by copyright. Copying for private or commercial purposes, in part or in whole, is not permitted unless authorised by Volkswagen AG. Volkswagen AG does not guarantee or accept any liability with respect to the correctness of information in this document. Copyright by Volkswagen AG.
satelettronica

Check conditions

- -> Fuse No. 3 must be OK.
- Earth connection between engine (on gearbox bell housing) and body (below battery) OK.
- Earth connection in plenum chamber OK.

- The battery voltage must be at least 11.5 V.
- Engine speed sender must be OK, checking Page 86 .

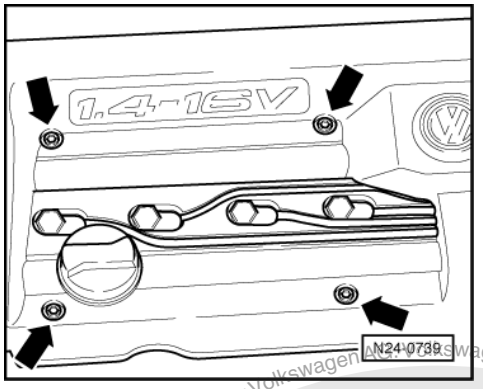

- Hall sender must be OK, checking =>Page 124 .
- Fuel pump relay must be OK

Test sequence

- -> Remove cover above camshaft housing -arrows-.

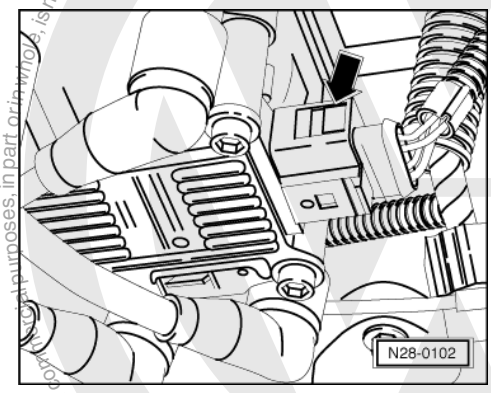

- -> Pull 4 pin connector off ignition transformer -arrow-.

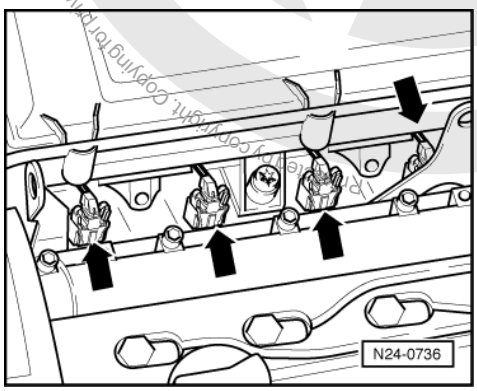

- -> Pull plug -arrows- off all injectors.

Copyright by Volkswagen AG. Volkswagen AG does not guarantee or accept any liability with respect to the correctness of information in this document. Copying for private or commercial purposes, in part or in whole, is not permitted unless authorised by Volkswagen AG.
satelettronica

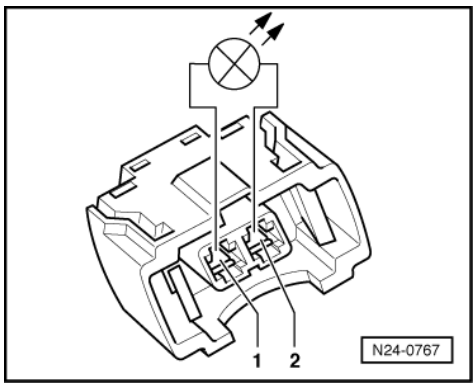

- -> Connect diode test lamp V.A.G 1527 using aux. cables from V.A.G 1594 to connector contacts of Cyl. 1.
- Operate the starter and check the voltage supply for No. 1 cylinder injector.
  The LED must light up
- Repeat check at the injector connectors for Cyls. 2...4.
- Switch off ignition.

If the LED does not light up on any cylinder:

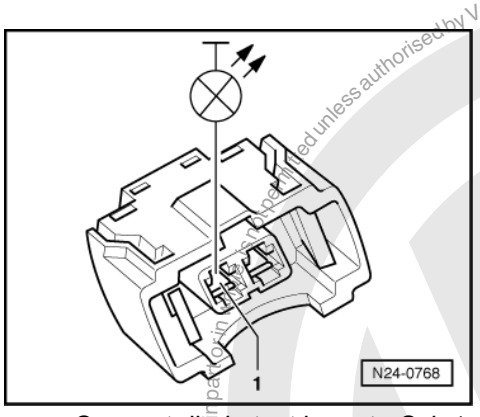

- -> Connect diode test lamp to Cyl. 1 connector, contact 1 and earth.
- Operate the starter and check the voltage supply for No. 1 cylinder injector.
  The LED must light up
- Repeat check at the injector connectors for Cyls. 2...4.

If the LED does not light up:

- Switch off ignition.
- Check wire between 2 pin connector contact 1 and fuel pump relay (J17) for open circuit according to current flow diagram.
  Wire resistance: max. 1.5 ω

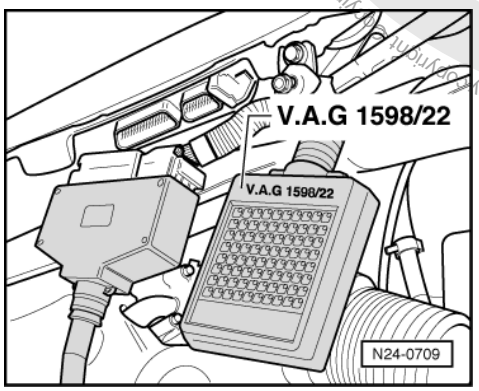

If the LED lights up on one or several cylinders:

Protected by copyright. Copying for private or commercial purposes, in part or in whole, is not permitted unless authorised by Volkswagen AG. Volkswagen AG does not guarantee or accept any liability with respect to the correctness of information in this document. Copyright by Volkswagen AG.
satelettronica

- -> Connect test box V.A.G 1598/22 to control unit wiring harness.

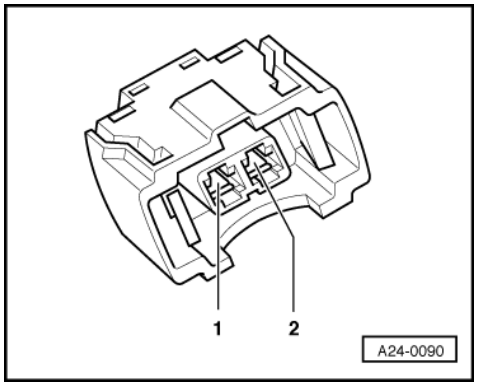

- -> Check wiring between test box and the injector 2 pin connectors for open circuit using current flow diagram.
  Injector 1: Contact 2+socket 73
  Injector 2: Contact 2+socket 80
  Injector 3: Contact 2+socket 58
  Injector 4: Contact 2+socket 65
  Wire resistance: Max.1.5 ω
- Additionally check wires for short to one another.
  Specification: ∞ω
- Check wiring between connector contacts 1 of injectors for open circuit to one another.
  Wire resistance: Max. 1.5 ω

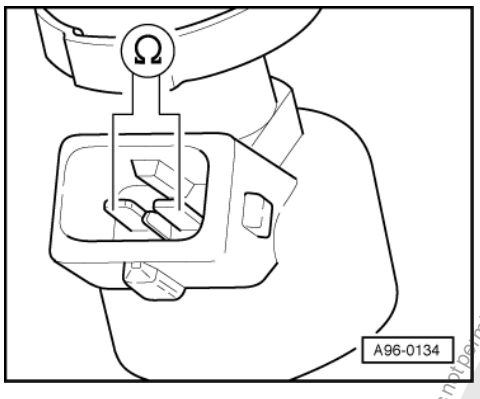

Checking resistance of injectors

Test sequence

- -> Check resistance of injectors individually
  Specification: 14.0...17.0 ω(at 20° C)

When the engine is warm the resistance will be approx. 4...6 ωhigher.

If the specification is not attained:

- Renew defective injector
  Page 57 , item 7 .

Protected by copyright. Copying for private or commercial purposes, in part or in whole, is not permitted unless authorised by Volkswagen AG. Volkswagen AG does not guarantee or accept any liability with respect to the correctness of information in this document. Copyright by Volkswagen AG.
satelettronica

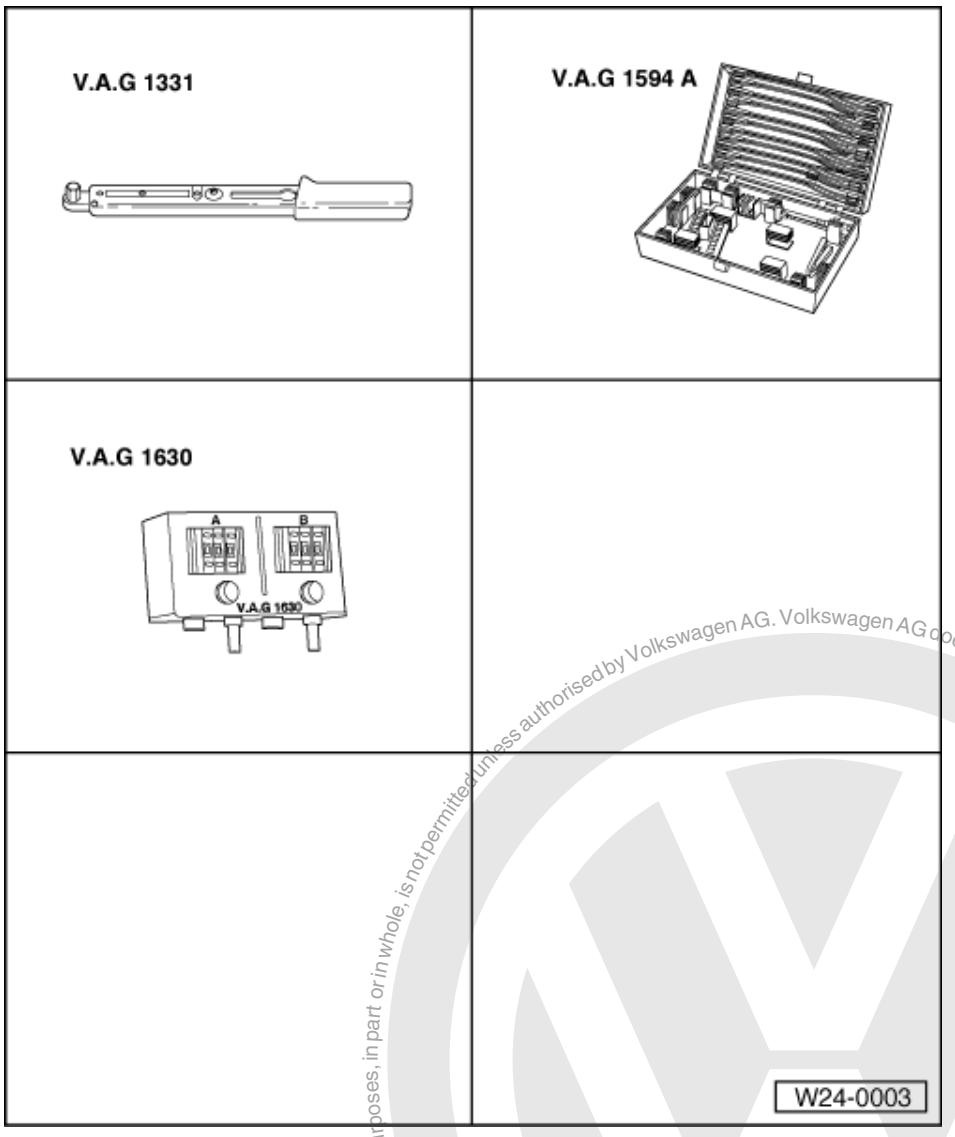

Checking spray pattern and for leaks

Special tools, workshop equipment, test and measuring appliances and aux. items required

- V.A.G 1331 Torque wrench (5...50 Nm)
- V.A.G 1594 A Adapter set
- V.A.G 1630 Digital potentiometer
- Measuring container

Test conditions

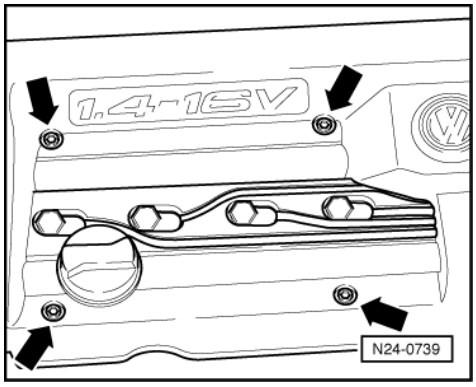

Protected by copyright. Copying for private or commercial purposes, in part or in whole, is not permitted unless authorised by Volkswagen AG. Volkswagen AG does not guarantee or accept any liability with respect to the correctness of information in this document. Copyright by Volkswagen AG.
satelettronica

- The fuel pressure must be in order, checking
  => Page 94 , checking fuel pressure regulator and holding pressure.

Test sequence

- -> Remove cover above camshaft housing -arrows-.
- Remove air cleaner => Page 62 , Fig. 3 .

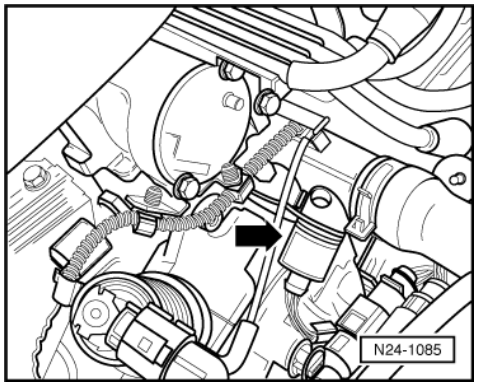

- -> Pull the 4 pin connector off coolant temperature sender (G62) with coolant temperature gauge sender (G2) -arrow-.

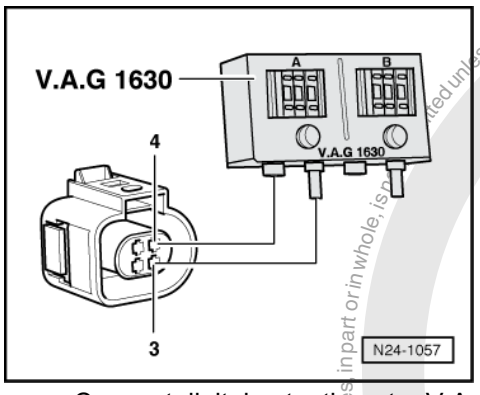

- -> Connect digital potentiometer V.A.G 1630 using aux. cables from V.A.G 1594 to connector contacts 3+4 and set connected side to 15 kω.
- Unclip the wiring harness for the injectors from intake manifold and thermostat housing.

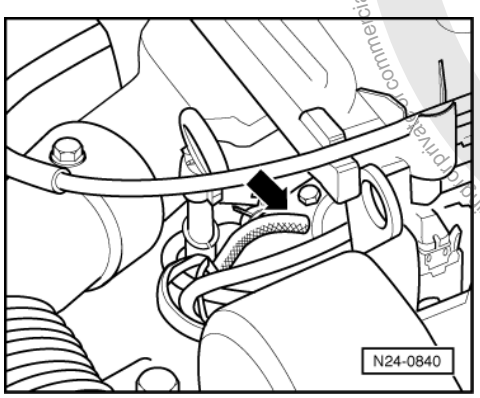

- -> Pull the vacuum hose off fuel pressure regulator -arrow-.
- Remove fuel rail complete with all injectors from intake manifold (fuel hoses remain connected) Page 44 , item 6 .

Protected by copyright. Copyright by Volkswagen AG.
Copyright by Volkswagen AG. Volkswagen AG does not guarantee or accept any liability with respect to the correctness of information in this document.
Copying for private or commercial purposes, in part or in whole, is not permitted unless authorised by Volkswagen AG.
satelettronica

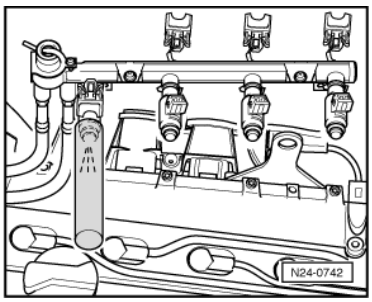

- -> Hold a small container under the injector to be checked and pull connectors off all other injectors.
- Have 2nd person operate starter. Injector must spray in pulses.
- Repeat check with other injectors ensuring that injector to be checked is only connected.
- Switch off ignition and afterwards check injectors for leaks. No more than
  2 drops/min
  may leak from each injector.

If the fuel loss is greater:

- Switch off ignition.
- Renew defective injector
  Page 57 , item 7 .

Perform installation of injectors in reverse order. When doing this note the following:

- Renew O-rings on all injectors and lightly moisten with clean engine oil.
- Fit fuel rail with secured injectors onto intake manifold and tighten evenly.

Protected by copyright. Copying for private or commercial purposes, in part or in whole, is not permitted unless authorised by Volkswagen AG. Volkswagen AG does not guarantee or accept any liability with respect to the correctness of information in this document. Copyright by Volkswagen AG.
satelettronica

2.9 - Checking fuel pressure regulator and holding pressure

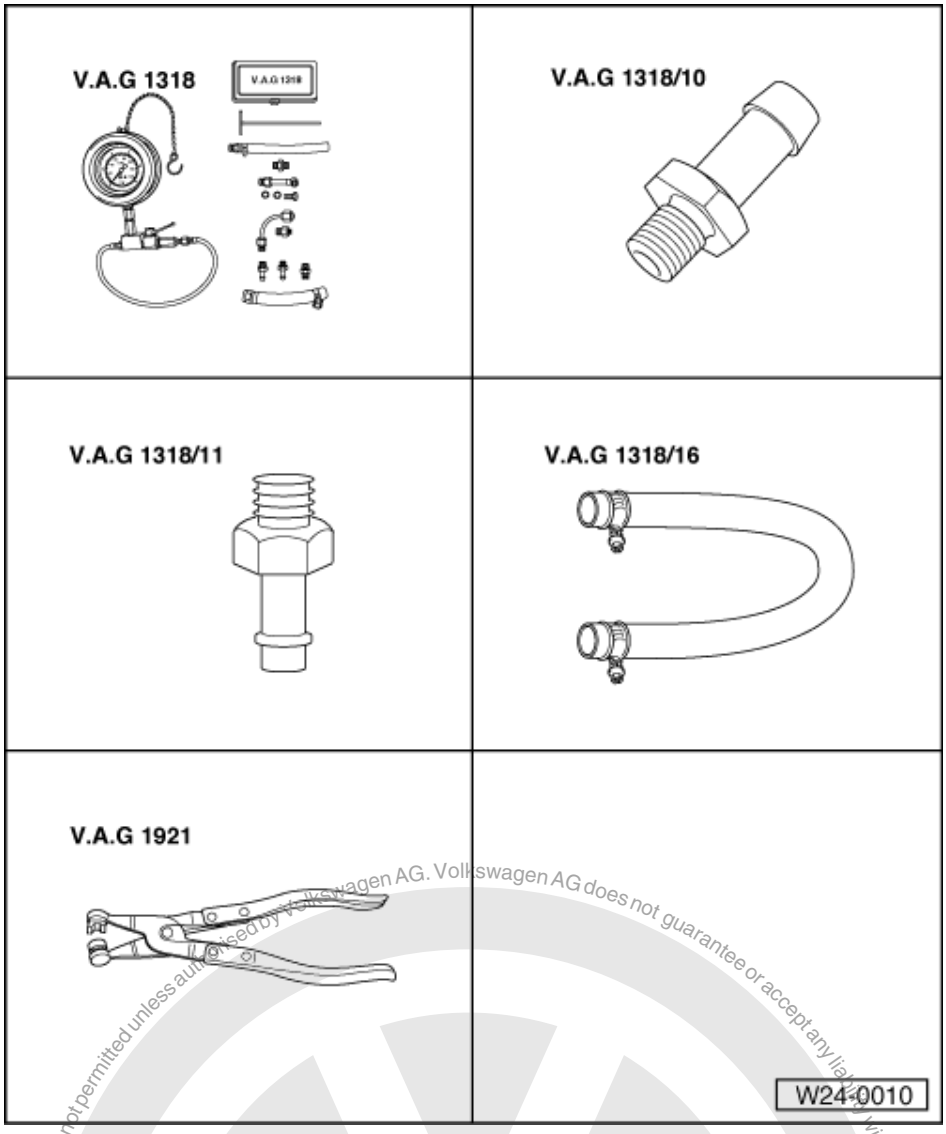

The fuel pressure regulator regulates the fuel pressure depending on intake manifold pressure.

The specification for the check is dependent upon the working pressure of the fuel pump. This is

approx. 3.0 bar

Special tools, workshop equipment, test and measuring appliances and aux. items required

- V.A.G 1318 Pressure gauge
- V.A.G 1318/10 Adapter
- V.A.G 1318/11 Adapter
- V.A.G 1318/16 Hose adapter
- V.A.G 1921 Spring-type clip pliers

Protected by copyright. Copying for private or commercial purposes, in part or in whole, is not permitted unless authorised by Volkswagen AG. Volkswagen AG does not guarantee or accept any liability with respect to the correctness of information in this document. Copyright by Volkswagen AG.

satelettronica

Test sequence

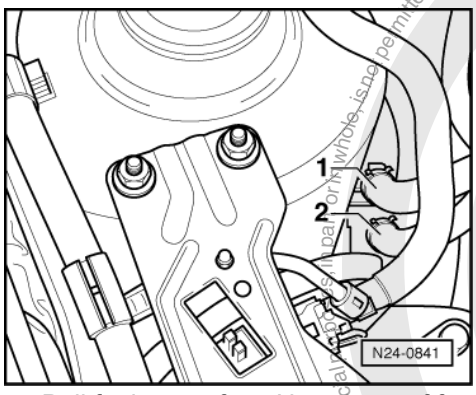

- Pull fuel pump fuse No. 40 out of fuse holder.

Warning!
Fuel system is under pressure! Before opening the system place a cloth around the connection. Then release pressure by carefully loosening the connection.

- -> Pull off the supply hose -1- (with white marking) and catch the fuel which runs out in a cloth.

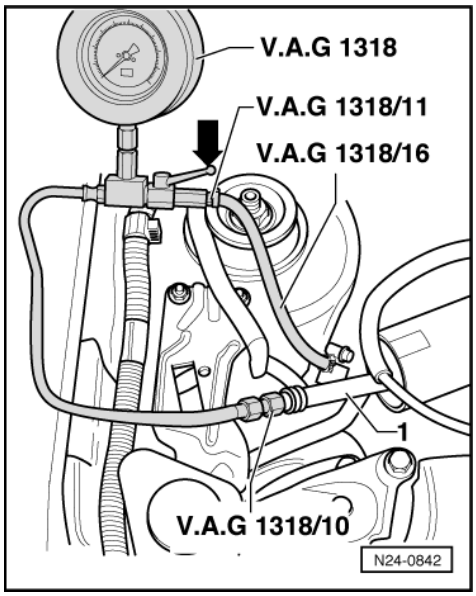

- -> Connect pressure gauge V.A.G 1318 with adapter V.A.G 1318/10 to supply hose -1- and with adapter V.A.G 1318/11 and hose adapter V.A.G 1318/16 to supply pipe.
- Open measured device cut-off tap. (The handle points in through-flow direction -arrow-).
- Insert fuel pump fuse No. 40 into fuse holder.
- Start the engine and run at idling speed.
- Measure fuel pressure.
  Specification: Approx. 2.5 bar

Protected by copyright. Copying for private or commercial purposes, in part or in whole, is not permitted unless authorised by Volkswagen AG. Volkswagen AG does not guarantee or accept any liability with respect to the correctness of information in this document. Copyright by Volkswagen AG.
satelettronica

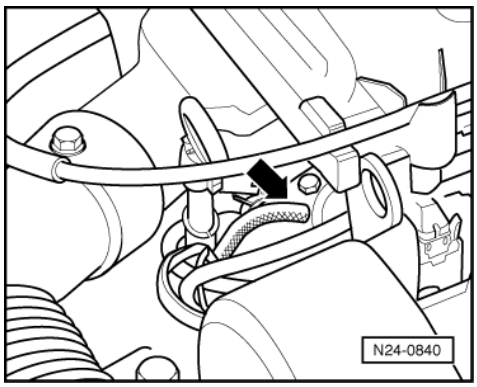

- -> Pull vacuum hose off fuel pressure regulator -arrow-. The fuel pressure must increase to approx. 3.0 bar.
- Switch off ignition.

If the specification is not obtained:

- Check quantity supplied by fuel pump.

=> Rep. Gr. 20; Removing and installing parts of fuel system; checking fuel pump

If the specification is obtained:

- Check for leaks and holding pressure by observing pressure drop on gauge. After 10 minutes there must be a residual pressure of at least 2.0 bar.

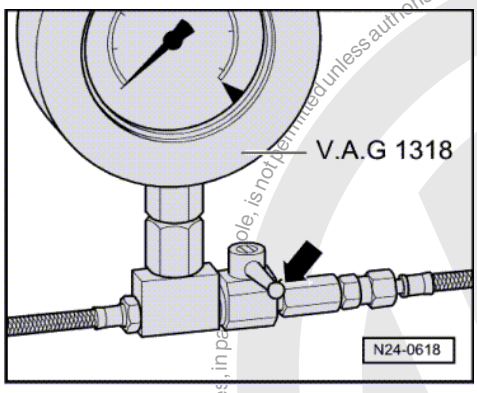

If the holding pressure drops below 2 bar:

- Start the engine and run at idling speed.
- -> Switch ignition off after the pressure has built-up. At the same time close pressure measured device cut-off tap (handle cross through-flow direction -arrow-).
- Observe pressure drop on gauge.

Protected by copyright. Copying for private or commercial purposes, in part or in whole, is not permitted unless authorised by Volkswagen AG. Volkswagen AG does not guarantee or accept any liability with respect to the correctness of information in this document. Copyright by Volkswagen AG.
satelettronica

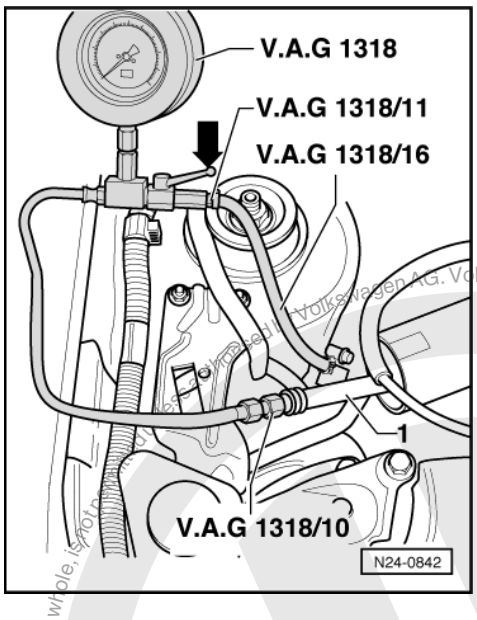

If the pressure does not drop:

- Check fuel pump non-return valve.

=> Rep. Gr. 20; Removing and installing parts of fuel system; checking fuel pump

If the pressure drops again:

- -> Open pressure gauge V.A.G 1318 shut-off tap (handle in direction of flow).
- Start the engine and run at idling speed.

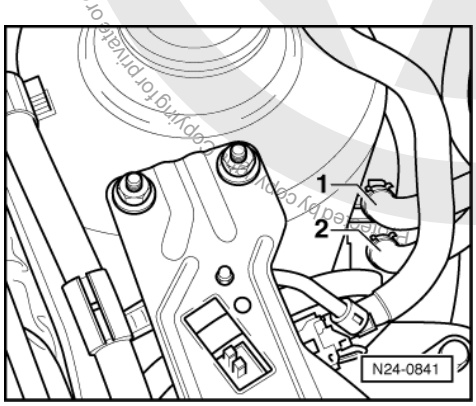

- -> Switch ignition off after the pressure has build-up. At the same time clamp-off the return hose (with blue marking) -2-.

If the pressure does not drop:

- Renew fuel pressure regulator
  =>Page 58 , item 11 .

If the pressure drops again:

- Check pipe connections, O-rings on fuel manifold and injectors for leaks.
- Check pressure gauge for leaks.

Note:

Before removing pressure gauge place a cloth around the connections to be loosened.

Copyright by Volkswagen AG. Volkswagen AG does not guarantee or accept any liability with respect to the correctness of information in this document. Copyright by Volkswagen AG.
satelettronica

2.10 - Checking intake air system for leaks (unmetered air)

Checking with engine leak detector spray G 001 800 A1

Special tools, workshop equipment, testers, measuring instruments and auxiliary items required

- Fault reader V.A.G 1551 or vehicle system tester V.A.G 1552 with cable V.A.G 1551/3A
- Engine leak detector spray G 001 800 A1

Test conditions

- Coolant temperature must be at least 80 °C, =>display group 1, display zone 2.

Test sequence

Notes:

- The vacuum in the intake system will cause the leak detector spray to be drawn in with the unmetered air. The leak detector spray reduces the ignitability of the mixture. This leads to a drop in engine speed and to a change of Lambda probe voltage.
- The safety precautions listed on the container must be adhered to.

- Connect fault reader V.A.G 1551 (V.A.G 1552). Start engine and select "Address word" 01 of engine control unit. When doing this the engine must be running at idling speed.
  (Connecting fault reader and selecting engine control unit => Page 2 .)

-> Indicated on display:

```
Rapid data transfer      HELP
Select function XX
```

- Press keys 0 and 8 for the function "Read measured value block" and confirm entry with Q key.

-> Indicated on display:

```
Read measured value block      HELP
Input display group number XXX
```

- Press keys 0, 0 and 1 for "Display group number 1" and confirm entry with Q key.

-> Indicated on display:
(1...4 = Display zones)

```
Read measured value block      1
    1      2      3      4
```

Only continue with the test when

- The coolant temperature is above 80 °C
  -Display zone 2-

- Observe the engine speed in display zone 1 and the Lambda probe voltage in display zone 3.
- Systematically spray parts of the intake system with engine leak detector spray.

If the engine speed drops or the Lambda probe voltage changes:

- Press ⇒key.
- Press keys 0 and 6 for the function "End output" and confirm entry with the Q key.
- Switch off ignition.
- Check sprayed areas of intake system for leaks and rectify if necessary.

Engine speed or Lambda probe voltage does not change:

- Press ⇒key.
- Press keys 0 and 6 for the function "End output" and confirm entry with the Q key.

Protected by copyright. Copying or distribution not permitted unless authorised by Volkswagen AG. Volkswagen AG does not guarantee or accept any liability with respect to the correctness of information in this document. Copyright by Volkswagen AG.

satelettronica

- Switch off ignition.

2.11 - Checking intake air preheating

Special tools, workshop equipment, testers, measuring instruments and auxiliary items required

- Chilling spray (commercially available)

Checking regulating flap

- Remove air cleaner intake support.

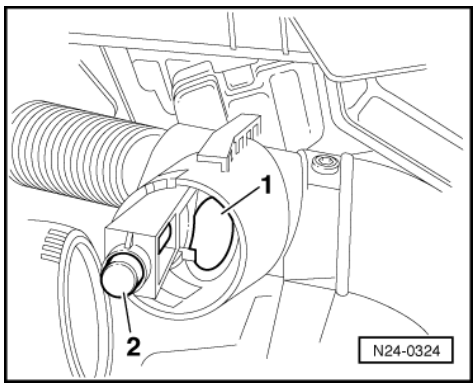

- -> Check control flap position -1-.
  - Above +23 °C flap must close warm air connection
  - Below +10 °C flap opens warm air connection

Note:

The function of the thermo element -2- can be checked easily by spraying with a commercial chilling agent.

3 - Checking functions

3.1 - Checking functions

3.2 - Checking Lambda probe and Lambda control

Note:

Only gold-plated contacts may be used when servicing Lambda probe connector contacts 3 and 4.

Special tools, workshop equipment, testers, measuring instruments and auxiliary items required

- Fault reader V.A.G 1551 or vehicle system tester V.A.G 1552 with cable V.A.G 1551/3A
- Test box V.A.G 1598/22
- Hand multimeter V.A.G 1526 or multimeter V.A.G 1715
- Adapter set V.A.G 1594
- Current flow diagram

Check conditions

- The engine control unit must be matched to the throttle valve control part=> Page 108
- Coolant temperature must be at least 80 °C, =>display group 1, display zone 2.

Copyright by Volkswagen AG. Volkswagen AG does not guarantee or accept any liability with respect to the correctness of information in this document. Copying for private or commercial purposes, in part or in whole, is not permitted unless authorised by Volkswagen AG.
satelettronica

- Exhaust system between catalyst and cylinder head must be free of leaks

Functional check

- Connect fault reader V.A.G 1551 (V.A.G 1552). Start engine and select "Address word" 01 of engine control unit. When doing this the engine must be running at idling speed.
  (Connecting fault reader and selecting engine control unit => Page 2 .)

-> Indicated on display:

```
Rapid data transfer     HELP
Select function XX
```

- Press keys 0 and 8 for the function "Read measured value block" and confirm entry with Q key.

-> Indicated on display:

```
Read measured value block
Input display group number XXX
```

- Press keys 0, 0 and 1 for "Display group number 1" and confirm entry with Q key.

-> Indicated on display:
(1...4 = Display zones)

```
Read measured value block     1
     1     2     3     4
```

Only continue with the test when

- The coolant temperature is above 80 °C
  -Display zone 2-
- The engine has then run for a further 2 minutes at idling speed

- Note Lambda probe voltage in display zone 3. The voltage must fluctuate
  at least 30 times per minute
  in range of
  0.000...1.000 V.
- Press ⇒key.
- Press keys 0 and 6 for the function "End output" and confirm entry with the Q key.

If the Lambda regulation does not fluctuate as stated:

- Carry out road test and burn Lambda probes clean and repeat check.

If the specifications are not obtained again:

- Switch off ignition.
- Check the Lambda probe heating
  => Page 64 .

If the voltage change is slower, determine cause of fault. => Page 101 .

If the displayed figure remains constant:

- Continue check according to following table.

Display	Cause	Continuation of check
Between 0.040... 0.050 V	Open circuit	Checking basic voltage => Page 102
0.000 V	Short to earth	

Protected by copyright. Copying for private or commercial purposes, in part or in whole, is not permitted unless authorised by Volkswagen AG. Volkswagen AG does not guarantee or accept any liability with respect to the correctness of information in this document. Copyright by Volkswagen AG.
satelettronica

Display	Cause	Continuation of check
1.200 V	Short to positive	

Possible causes of fault if probe control frequency is too slow:

- The slots or holes in probe body are blocked
- The probe vent hole in area of connecting wire is blocked
- The probe has been overheated (glazed)
- The probe has been damaged by leaded fuel

Checking basic voltage

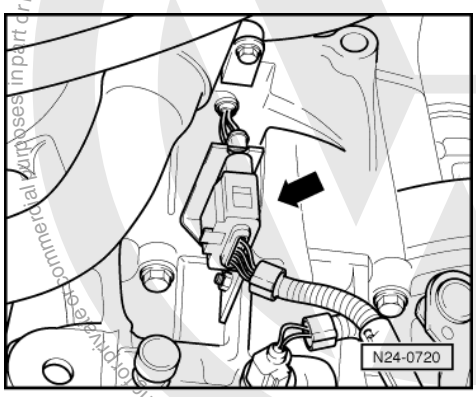

- -> Separate 4 pin connector to Lambda probe (G39) -1-.

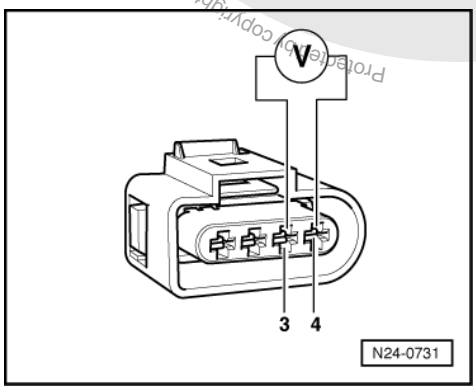

- -> Connect multimeter with aux. cables from V.A.G 1594 to measure voltage at contacts 3+4 (connector to engine control unit).
- Switch on ignition and measure basic voltage.
  Specification: 0.040...0.050 V
- Switch off ignition.

If the specification is not obtained:

- Check Lambda probe wiring
  => Page 102

If the specification is obtained:

- Renew Lambda probe (G39)
  =>Page 46 , item 15 .

Protected by copyright. Copying for private or commercial purposes, in part or in whole, is not permitted unless authorised by Volkswagen AG. Volkswagen AG does not guarantee or accept any liability with respect to the correctness of information in this document. Copyright by Volkswagen AG.
satelettronica

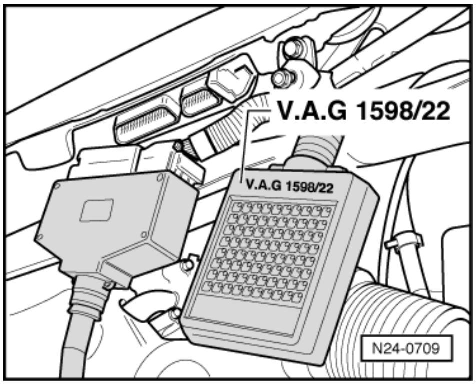

Checking Lambda probe wiring

- -> Connect test box V.A.G 1598/22 to control unit wiring harness.

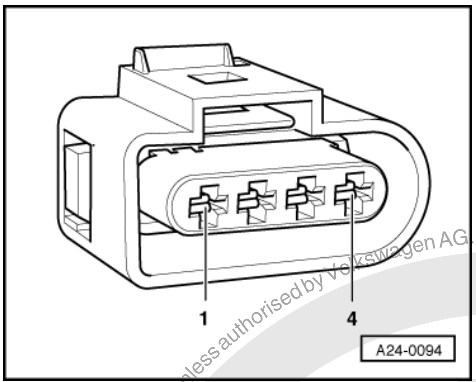

- -> Check wiring between test box and 4 pin connector (to control unit) for open circuit according to current flow diagram.
  Contact 3+socket 25
  Contact 4+socket 26
  Wire resistance: Max. 1.5 ω
- Check wiring at connector contacts 3+4 for short circuit to contacts 1+2 according to current flow diagram.
  Specification: ∞ω

If no wiring fault is detected:

- Renew Lambda probe (G39)
  =>Page 46 , item 15 .

3.3 - Checking engine operating mode

Note:

Checks whether engine control unit recognises the engine operating modes idling, overrun, part throttle, enrichment, full throttle.

Special tools, workshop equipment, testers, measuring instruments and auxiliary items required

- Fault reader V.A.G 1551 or vehicle system tester V.A.G 1552 with cable V.A.G 1551/3A

Check conditions

- Coolant temperature must be at least 80 °C, =>display group 1, display zone 2.
- Throttle cable adjustment must be OK, checking:

Protected by copyright. Copying for private or commercial purposes, in part or in whole, is not permitted unless authorised by Volkswagen AG. Volkswagen AG does not guarantee or accept any liability with respect to the correctness of information in this document. Copyright by Volkswagen AG.

satelettronica

=> Repair group 20; Throttle controls; Adjusting throttle cable Throttle controls Adjusting throttle cable

Test sequence

- Connect fault reader V.A.G 1551 (V.A.G 1552). Start engine and select "Address word" 01 of engine control unit. When doing this the engine must be running at idling speed.
  (Connecting fault reader and selecting engine control unit => Page 2 .)

-> Indicated on display:

```
Rapid data transfer      HELP
Select function XX
```

- Press keys 0 and 8 for the function "Read measured value block" and confirm entry with Q key.

-> Indicated on display:

```
Read measured value block     HELP
Input display group number XXX
```

- Press keys 0, 0 and 1 for "Display group number 1" and confirm entry with Q key.

-> Indicated on display:
(1...4 = Display zones)

```
Read measured value block     1
     1     2     3     4
```

- Check whether the coolant temperature is above 80 °C in display zone 2.
- Press C key.

-> Indicated on display:

```
Read measured value block     HELP
Input display group number XXX
```

- Press keys 0, 0 and 4 for "Display group number 4" and confirm entry with Q key.

-> Indicated on display:
(1...4 = Display zones)

```
Read measured value block     4
     1     2     3     4
```

- Observe -8 digit number block- in display zone 4 :
  (The right-hand 4 digits are of no consequence)

Display in operating mode

◆ Idling:

- With throttle valve closed, 2nd position from left must display 1
  Display: 01000000

◆ Part throttle:

- Rev up evenly.

  3rd position from left must display 1
  Display: 00100000

◆ Full throttle:

- Briefly open throttle fully (throttle burst).

  4th position from left must briefly display 1

Protected by copyright. Copying for private or commercial purposes, in part or in whole, is not permitted unless authorised by Volkswagen AG. Volkswagen AG does not guarantee or accept any liability with respect to the correctness of information in this document. Copyright by Volkswagen AG.

satelettronica

Display: 00010000

Note:
A test drive may have to be performed to show "Full throttle" in display.
A 2nd person is required when performing a test drive.

Warning!
Secure fault reader to rear seat and operate from this position.

Observe the valid safety measures during a test drive => Page 62 .

- Overrun mode:

- Increase engine speed to above 3000 rpm.
- Close throttle valve abruptly.

As long as the engine speed is above 1400 rpm, 1st position from left must display 1
Display: 11000000 (briefly)

Note:
Below 1400 rpm idling speed is again recognised.

- Press ⇒key.
- Press keys 0 and 6 for the function "End output" and confirm entry with the Q key.
- Switch off ignition.

If the specifications are not attained:

- Interrogate fault memory, if necessary, repair any faults and then erase fault memory => Page 8 , interrogating and erasing fault memory.
- Check accelerator mechanism for ease of operation.
- Check throttle valve potentiometer
  => Page 66 , Checking throttle valve control part.

4 - Engine control unit

4.1 - Engine control unit

4.2 - Checking control unit voltage supply

Special tools, workshop equipment, testers, measuring instruments and auxiliary items required

- Fault reader V.A.G 1551 or vehicle system tester V.A.G 1552 with cable V.A.G 1551/3A
- Test box V.A.G 1598/22
- Hand multimeter V.A.G 1526 or multimeter V.A.G 1715
- Adapter set V.A.G 1594
- Current flow diagram

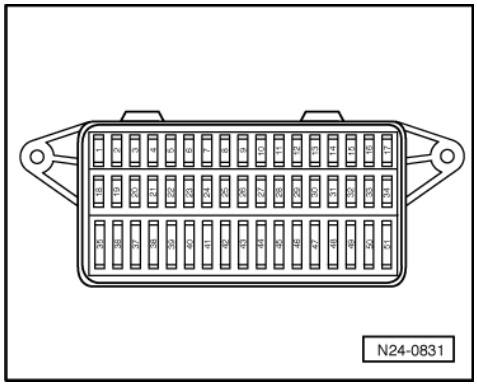

Protected by copyright. Copying for private or commercial purposes, in part or whole, is not permitted unless authorised by Volkswagen AG. Volkswagen AG does not guarantee or accept any liability with respect to the correctness of information in this document. Copyright by Volkswagen AG.
satelettronica

Check conditions

- -> Fuses No. 32 and 37 must be OK.
- Earth connection in plenum chamber OK.
- The battery voltage must be at least 11.5 V.
- If the vehicle is equipped with an air conditioner, this must be switched off.
- All electrical consumers, e.g. lights and rear window heating must be switched off.
- On vehicles with automatic gearbox the selector lever must be in "P" or "N" position.
- Alternator OK, checking:

=> Current flow diagrams, Electrical fault finding and Fitting locations

Test sequence

- Connect fault reader V.A.G 1551 (V.A.G 1552). Start engine and select "Address word" 01 of engine control unit. When doing this the engine must be running at idling speed.
  (Connecting fault reader and selecting engine control unit => Page 2 .)

-> Indicated on display:

```
Rapid data transfer      HELP
Select function XX
```

- Press keys 0 and 8 for the function "Read measured value block" and confirm entry with Q key.

-> Indicated on display:

```
Read measured value block     HELP
Input display group number XXX
```

- Press keys 0, 0 and 2 for "Display group number 2" and confirm entry with Q key.

-> Indicated on display:
(1...4 = Display zones)

```
Read measured value block 2
     1     2     3     4
```

- Read off figure displayed in display zone 3.
  Specification: At least 11.5 V
- Press the ⇒key.
- Press keys 0 and 6 for the "End output" function and confirm input with the Q key.
- Switch off ignition.

If the specification is not attained:

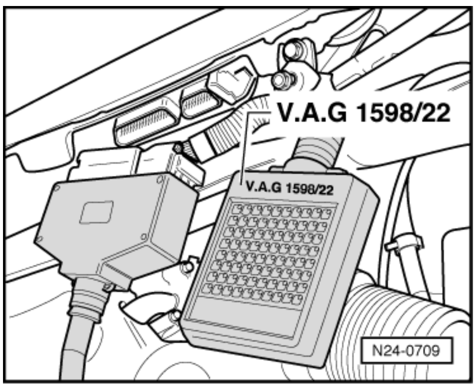

- -> Connect test box V.A.G 1598/22 to control unit wiring harness.

Checking voltage supply terminal 30

- Measure supply voltage between test box sockets 1+2 using multimeter and adapter cables from V.A.G 1594:

Protected by copyright. Copying for private or commercial purposes, in part or in whole, is not permitted unless authorised by Volkswagen AG. Volkswagen AG does not guarantee or accept any liability with respect to the correctness of information in this document. Copyright by Volkswagen AG.
sateletronica

Specification: at least 11.5 V

If the specification is not attained:
- Check wiring connections to relay plate according to current flow diagram.

=> Current flow diagrams, Electrical fault finding and Fitting locations

Checking voltage supply terminal 15
- Measure supply voltage between test box sockets 2+3 using multimeter and adapter cables from V.A.G 1594.
- Switch on ignition.
  Specification: min. 11.5 V

If the specification is not attained:
- Check wiring connections to relay plate according to current flow diagram.

=> Current flow diagrams, Electrical fault finding and Fitting locations

4.3 - Replacing engine control unit

The engine control unit regulates the injection, throttle valve control part, Lambda control, ignition, knock control, activated charcoal filter solenoid valve 1, engine speed governor via injectors or fuel pump relay, exhaust gas recirculation as well as self-diagnosis.

Special tools, workshop equipment, testers, measuring instruments and auxiliary items required
- Fault reader V.A.G 1551 with cable V.A.G 1551/3A

Removing
- First print out the control unit identification and thereby the previous control unit coding as follows:
- Connect the fault reader V.A.G 1551 (V.A.G 1552). Then switch ignition on and select engine control unit with the "Address word" 01.
  (Connecting fault reader and selecting engine control unit => Page 2 .)

-> The control unit identification and the coding will appear on the display, e.g.:

```
036 906014AN
```

- Print out the control unit identification by pressing the fault reader print button.
- Press the ⇒key.

-> Indicated on display:

```
Rapid data transfer      HELP
Select function XX
```

- Press keys 0 and 6 for the function "End output" and confirm entry with the Q key.

-> Indicated on display:

```
Rapid data transfer      HELP
Enter address word XX
```

- Switch off ignition.
- Release connector from control unit and pull off.

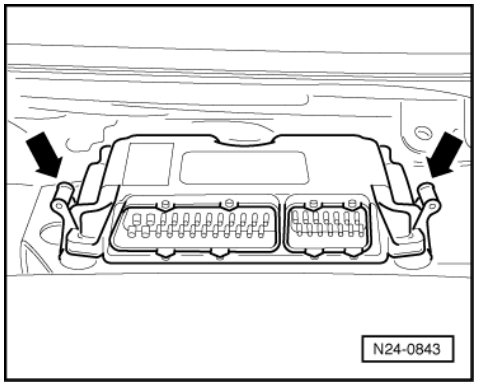

Protected by copyright. Copyright by Volkswagen AG. Volkswagen AG does not guarantee or accept any liability with respect to the correctness of information in this document. Copyright by Volkswagen AG. Volkswagen AG authorised by Volkswagen AG. Volkswagen AG does not guarantee or accept any liability with respect to the correctness of information in this document. Copyright by Volkswagen AG.
satelettronica

- -> Unclip the control unit from the retaining frame -arrows-.

Installing

- Place the new control unit into the retaining frame.
- Install control unit connector and lock.
- Check the previous coding and the coding of the new control unit => Page 107 .
- Adapt new control unit to throttle valve control part => Page 108
- Adapting gearbox control unit, vehicles with automatic gearbox:

=> Self-diagnosis for automatic gearbox 001; Repair group 01; Performing self-diagnosis; Initiating basic setting Performing self-diagnosis Initiating basic setting

- Adapt new control unit to the electronic immobilizer => Page 109
- Then subsequently interrogate the fault memory of the new engine control unit again and erase the fault memory if necessary => Page 8 , interrogating and erasing fault memory.

4.4 - Coding engine control unit

Notes:

- A 5-character code must always be displayed during the control unit identification.
- The control unit must be recoded if the vehicle relevant coding is not displayed or the control unit has been renewed.

Special tools, workshop equipment, testers, measuring instruments and auxiliary items required

- Fault reader V.A.G 1551 with cable V.A.G 1551/3A

Work sequence

- Connect the fault reader V.A.G 1551 (V.A.G 1552). Then switch ignition on and select engine control unit with the "Address word" 01.
  (Connecting fault reader and selecting engine control unit => Page 2 .)

-> Indicated on display:

```
Rapid data transfer      HELP
Select function XX
```

- Press keys 0 and 7 for the function "Code control unit" and confirm entry with Q key.

-> Indicated on display:

```
Coding control unit      Q
Enter code number XXXXX     (0-127)
```

- Enter the relevant code number for this vehicle and confirm with Q key.

Code number	Vehicles with
00001	Manual gearbox
00011	Manual gearbox with ABS
00021	Manual gearbox with airbag
00031	Manual gearbox with ABS and airbag
00003	Automatic gearbox
00013	Automatic gearbox with ABS
00023	Automatic gearbox with airbag
00033	Automatic gearbox with ABS and airbag

-> The control unit identification and the coding will appear on the display, e.g.:

satelettronica
Protected by copyright. Copyright by Volkswagen AG. Volkswagen AG does not guarantee or accept any liability with respect to the correctness of information in this document. Copyright by Volkswagen AG. Protected by copyright. Copying permitted only with express authorisation by Volkswagen AG.

```
036 906014AN
```

-> Indicated on display when a non-authorised code number has been entered.

```
Function is not recognised or cannot
□
be performed at the moment.
```

- Press the ⇒key.
- Press keys 0 and 6 for the "End output" function and confirm input with the Q key.
- Switch off ignition.
- Switch ignition on again after 5 seconds.
- Interrogate fault memory after 60 seconds, eliminate faults if necessary, then erase fault memory => Page 8 , Interrogating and erasing fault memory.

Note:

The 4CV control unit uses the coding entered as indicated on display first after 60 seconds, after ignition has been switched on.

An incorrectly coded engine control unit leads to:

- Engine running faults (gear change jerks, load change jerks, etc.)
- Increased fuel consumption
- Increased exhaust gas emissions
- Faults stored in fault memory which are not actually present
- Functions will not be performed (Lambda regulation, activation of the activated charcoal filter system, etc.).
- Reduced gearbox life

4.5 - Adapting engine control unit to throttle valve control part

When matching with ignition switched on but engine not running the engine control unit learns the throttle valve control part limit positions and a comparison curve between throttle valve potentiometer and throttle valve positioner.

Adapting sequence must be performed if:

- The voltage supply is interrupted
- The throttle valve control unit is removed and installed
- The throttle valve control unit is renewed
- The engine control unit is replaced
- If when installing another engine another throttle valve control unit is installed

Special tools, workshop equipment, testers, measuring instruments and auxiliary items required

- Fault reader V.A.G 1551 or vehicle system tester V.A.G 1552 with cable V.A.G 1551/3A

Test conditions

- No faults must be stored in fault memory => Page 8 , interrogating and erasing fault memory.
- The battery voltage must be at least 11.5 V.
- All electrical consumers, e.g. lights and rear window heating must be switched off.
- The throttle valve must be at idling speed position.
- The cruise control system must be functioning correctly if installed.
- Throttle cable adjustment must be OK, checking:

=> Repair group 20; Throttle controls; Adjusting throttle cable Throttle controls Adjusting throttle cable

Work sequence

- Connect the fault reader V.A.G 1551 (V.A.G 1552). Then switch ignition on and select engine control unit with the "Address word" 01.

Protected by copyright. Copying for private or commercial purposes, in part or in whole, is not permitted unless authorised by Volkswagen AG. Volkswagen AG does not guarantee or accept any liability with respect to the correctness of information in this document. Copyright by Volkswagen AG.
satelettronica

(Connecting fault reader and selecting engine control unit => Page 2 .)

-> Indicated on display:

```
Rapid data transfer      HELP
Select function XX
```

- Press keys 0 and 4 for the function "Introduction of basic setting" and confirm entry with Q key.

-> Indicated on display:

```
Basic setting
Input display group number XXX
```

- Press keys 0, 9 and 8 for "Display group number 98" and confirm entry with Q key.

-> Indicated on display:

```
System in basic setting      98
     x.xxx V     x.xxx V     Idling ADP.
runs
```

After pressing the Q-key the throttle valve positioner is driven to Min., Max. and five intermediate positions and the relevant throttle valve angle stored in non-volatile memory. This procedure takes approx. 10 seconds. The throttle valve then remains in the start position for a brief period then closes.

-> Indicated on display:

```
System in basic setting      98
     x.xxx V     x.xxx V     Idling ADP.
OK.
```

Adapting has been performed successfully.

To store the values:

- Switch off ignition.

Note:

If the basic setting of the control unit is interrupted, the cause could be one of the following:

- Throttle valve cannot reach the mechanical stop because of contamination e.g. oil deposits or an incorrectly adjusted throttle cable.
- Battery voltage too low.
- Throttle valve control unit or wiring is defective. Check => Page 66 .

After an interruption the possible faults are stored in fault memory. When next switching on ignition the basic setting is automatically performed again.

- End the engine basic setting by pressing the⇒ key.
- Check specifications of throttle valve control part in display group 5 (display zone 4), => Page 29 , evaluating measured value blocks. If the specifications are not obtained, repeat matching.
- Press keys 0 and 6 for the function "End output" and confirm entry with the Q key.

4.6 - Adapting engine control unit to electronic immobilizer

Special tools, workshop equipment, testers, measuring instruments and auxiliary items required

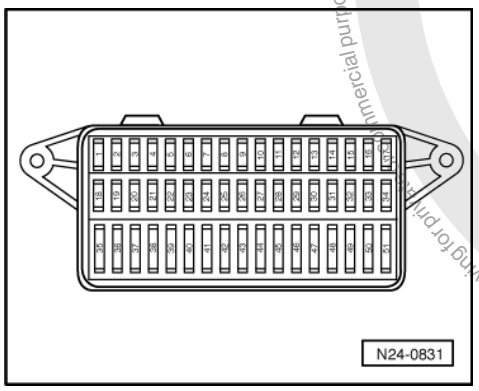

satelettronica
Protected by copyright. Copying for private or commercial purposes, in part or in whole, is not permitted unless authorised by Volkswagen AG. Volkswagen AG does not guarantee or accept any liability with respect to the correctness of information in this document. Copyright by Volkswagen AG.

- Fault reader V.A.G 1551 or vehicle system tester V.A.G 1552 with cable V.A.G 1551/3A

Conditions

- -> Fuses No. 29, 32 and 37 must be OK.
- Authorized vehicle key required.

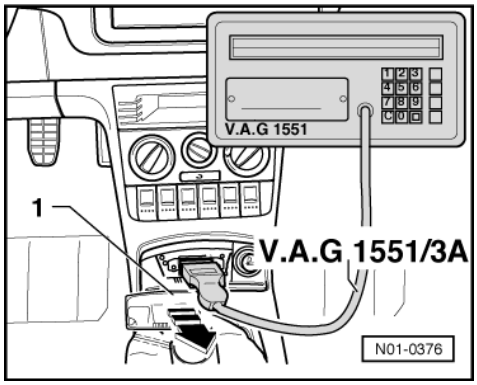

Work sequence

- -> Pull out ashtray -1-.
- Connect fault reader V.A.G 1551 or vehicle system tester V.A.G 1552 with cable V.A.G 1551/3A.

- Switch on ignition.
- Operate fault reader or vehicle system tester taking into account the information on the display:
- Press key 1 for "Rapid data transfer".
- Press keys 2 and 5 for address word "Immobilizer" and confirm entry with Q key.

-> Indicated on display:

```
6H0953257 IMMO VWZ3Z0V6474044 V64
Coding 00000     WSC XXXXX
```

- Press the ⇒key.

-> Indicated on display:

```
Rapid data transfer     HELP
Select function XX
```

- Press keys 1 and 0 for function "Adaption" and confirm entry with Q key.

-> Indicated on display:

```
Adaption
Feed in channel number XX
```

- Press key 0 twice for "Channel number 0" and confirm entry with Q key.

-> Indicated on display:

```
Adaption     Q
Erase learnt values?
```

- Confirm input with Q key.

-> Indicated on display:

```
Adaption
Learnt values have been erased
```

- Conclude adaption by pressing ⇒ key.
- Press keys 0 and 6 for the function "End output" and confirm entry with the Q key.

-> Indicated on display:

Protected by copyright. Copying for private or commercial purposes, in part or in whole, is not permitted unless authorised by Volkswagen AG. Volkswagen AG does not guarantee or accept any liability with respect to the correctness of information in this document. Copyright by Volkswagen AG.
satelettronica

```
Rapid data transfer      HELP
Enter address word XX
```

- Switch off ignition.

Note:

The identity of the engine control unit is read into the immobilizer control unit when next switching the ignition on.

5 - Checking additional signals

5.1 - Checking additional signals

5.2 - Checking speed signal

Special tools, workshop equipment, testers, measuring instruments and auxiliary items required

- Fault reader V.A.G 1551 or vehicle system tester V.A.G 1552 with cable V.A.G 1551/3A
- Test box V.A.G 1598/22
- Hand multimeter V.A.G 1526 or multimeter V.A.G 1715
- Adapter set V.A.G 1594
- Current flow diagram

Check conditions

- The battery voltage must be at least 11.5 V.
- Speedometer OK., checking:

=> Repair group 01; Electrical system self-diagnosis Electrical system self-diagnosis

Test sequence

Note:

To check the speed signal the vehicle must be driven. To do this a second person is necessary.

Warning!
Secure fault reader to rear seat and operate from this position.

Observe the valid safety precautions when carrying out a road test => Page 62 .

- Connect fault reader V.A.G 1551 (V.A.G 1552). Start engine and select "Address word" 01 of engine control unit. When doing this the engine must be running at idling speed.
  (Connecting fault reader and selecting engine control unit => Page 2 .)

-> Indicated on display:

```
Rapid data transfer      HELP
Select function XX
```

- Press keys 0 and 8 for the function "Read measured value block" and confirm entry with Q key.

-> Indicated on display:

```
Read measured value block      HELP
Input display group number XXX
```

Protected by copyright. Copyright by Volkswagen AG. Copyright by Volkswagen AG. Volkswagen AG does not guarantee or accept any liability with respect to the correctness of information in this document. Copying for private or commercial purposes, in part or in whole, is not permitted unless authorised by Volkswagen AG.
satelettronica

- Press keys 0, 0 and 4 for "Display group number 4" and confirm entry with Q key.

-> Indicated on display:
(1...4 = Display zones)

```
Read measured value block 4
     1     2     3     4
```

- Carry out test drive with a 2nd person to observe display.
- Observe figure displayed in display zone 3:
  Specification: approx. driven speed
- Drive slower. The displayed value must
  decrease.
- Press the ⇒key.
- Press keys 0 and 6 for the "End output" function and confirm input with the Q key.
- Switch off ignition.

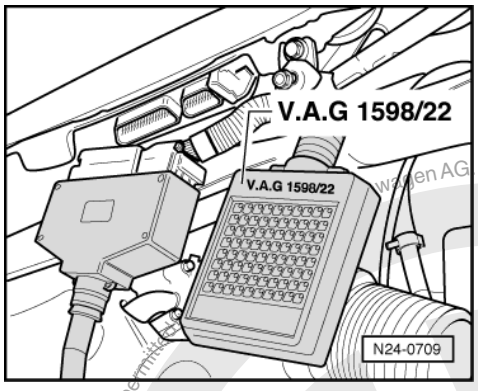

If no speed is indicated or the display values reduce when driving slowly:

- -> Connect test box V.A.G 1598/22 to control unit wiring harness.
- Connect multimeter to measure voltage between test box sockets 2+20.
- Switch on ignition.
- Lift vehicle at front left.
- Rotate front wheel and observe voltage display.
  Specification: between 0 and at least 4 Volt fluctuating

If the display does not fluctuate:

- Check wiring to speedometer/speedometer sender:

=> Current flow diagrams, Electrical fault finding and Fitting locations

5.3 - Checking signal from/to air conditioning system

Air conditioner compressor signal:
Voltage is supplied to the engine control unit shortly before switching on the air conditioner compressor. The signal ensures that the control unit keeps the idling speed constant for the differing power requirements of the air conditioning system.

Air conditioner cut-off:
The air conditioner compressor is switched off for approx. 6 seconds by the engine control unit when accelerating from standstill and from low speeds (1st gear) to ensure that the full engine power is available when accelerating. If the accelerator is released earlier the time is shortened to a minimum of 3 seconds. At full throttle the air conditioner compressor is switched off by the gearbox control unit (Kick-down switch).

Special tools, workshop equipment, testers, measuring instruments and auxiliary items required

- Fault reader V.A.G 1551 or vehicle system tester V.A.G 1552 with cable V.A.G 1551/3A
- Test box V.A.G 1598/22

Volkswagen AG. Volkswagen AG does not guarantee or accept any liability with respect to the correctness of information in this document. Copyright by Volkswagen AG. Protected by copyright. Copying for private or commercial purposes, in part or in whole, is not permitted.
satelettronica

- Hand multimeter V.A.G 1526 or multimeter V.A.G 1715
- Adapter set V.A.G 1594
- Current flow diagram

Test conditions

- Air conditioner functioning OK.
- Air conditioner must be switched off
- All electrical consumers, e.g. lights and rear window heating must be switched off.
- Vehicle at room temperature (warmer than + 15 °C).

Test sequence

- Connect fault reader V.A.G 1551 (V.A.G 1552). Start engine and select "Address word" 01 of engine control unit. When doing this the engine must be running at idling speed.
  (Connecting fault reader and selecting engine control unit => Page 2 .)

-> Indicated on display:

```
Rapid data transfer      HELP
Select function XX
```

- Press keys 0 and 8 for the function "Read measured value block" and confirm entry with Q key.

-> Indicated on display:

```
Read measured value block      HELP
Input display group number XXX
```

- Press keys 0, 0 and 1 for "Display group number 1" and confirm entry with Q key.

-> Indicated on display:
(1...4 = Display zones)

```
Read measured value block      1
     1     2     3     4
```

- Observe -8 digit number block- in display zone 4 :

  3rd position from left must display 0
  Display: 00000000

- Switch on air conditioning system.
- Select lowest temperature and highest blower speed.

  3rd position from left must display 1
  Display: 10100000

- Floor accelerator pedal quickly and release again (short throttle burst).

When the accelerator pedal is depressed quickly the 3rd position from left in display zone 4 must display a "0" for a few seconds (compressor switch-off when vehicle is accelerating).

- Press the ⇒key.
- Press keys 0 and 6 for the "End output" function and confirm input with the Q key.

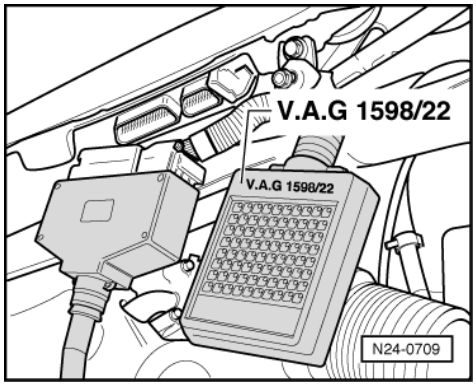

Protected by copyright. Copying for private or commercial purposes, in part or in whole, is not permitted unless authorised by Volkswagen AG. Volkswagen AG does not guarantee or accept any liability with respect to the correctness of information in this document. Copyright by Volkswagen AG.
satelettronica

- Switch off ignition.

If the display does not indicate as described:

- -> Connect test box V.A.G 1598/22 to control unit wiring harness.
- Check wiring between test box sockets 8 + 10 and air conditioner for open circuit using current flow diagram.
  Wire resistance: Max. 1.5 ω

5.4 - Checking driving range signal

Engine control unit receives information from gearbox control unit:
Driving range selected (selector lever in 1/2/3/R/D)
or
No driving range selected (selector lever in P or N)

Special tools, workshop equipment, testers, measuring instruments and auxiliary items required

- Test box V.A.G 1598/22
- Adapter set V.A.G 1594
- Diode test lamp V.A.G 1527
- Current flow diagram

Check conditions

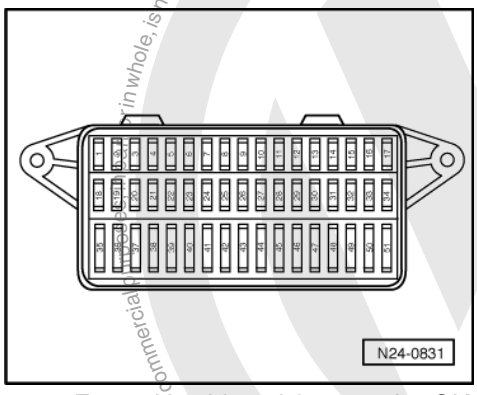

- -> Fuses No. 32 and 37 must be OK.
- The battery voltage must be at least 11.5 V.
- All electrical consumers, e.g. lights and rear window heating must be switched off.
- On vehicles with automatic gearbox the selector lever must be in "P" or "N" position.

Test sequence

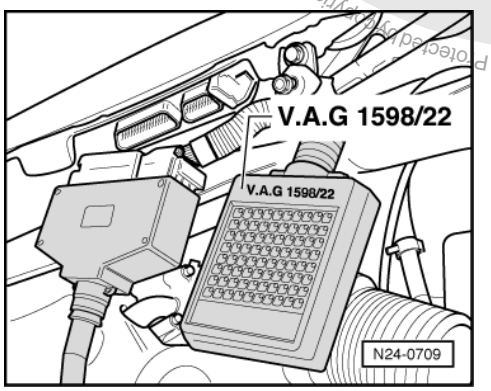

- -> Connect test box V.A.G 1598/22 to control unit wiring harness.
- Connect diode test lamp between socket 1 (terminal 30) and socket 22.
- Switch on ignition.
- The diode test lamp should go out when a gear is engaged.
- Switch off ignition.

satelettronica

- If the diode test lamp is permanently lit or does not light up at all, check the wiring from contact 22 on engine control unit to automatic gearbox for short to positive and to earth as well as for open circuit:

=> Current flow diagrams, Electrical fault finding and Fitting locations

5.5 - Checking rpm signal

Note:

The engine speed signal is output on contact 6 of engine control unit, the signal is necessary amongst other things for the automatic gearbox control unit to calculate the shift points and for the rev. counter in dash panel insert.

Special tools, workshop equipment, testers, measuring instruments and auxiliary items required

- Test box V.A.G 1598/22
- Adapter set V.A.G 1594
- Hand multimeter V.A.G 1526 or multimeter V.A.G 1715
- Current flow diagram

Test conditions

- No faults must be stored in fault memory => Page 8 , interrogating and erasing fault memory.

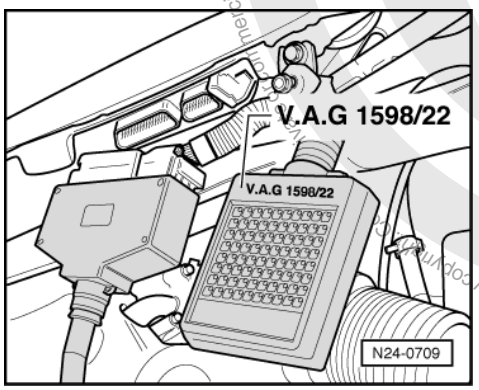

Test sequence

- -> Connect test box V.A.G 1598/22 to control unit wiring harness.
- Check the wiring from test box contact 6 to dash panel insert for open circuit using current flow diagram:

=> Current flow diagrams, Electrical fault finding and Fitting locations

5.6 - Checking gearbox intervention signal when a gear is shifted

Notes:

- This signal is produced by the automatic gearbox control unit during a gearshift. The signal enables the ignition timing to be briefly retarded by varying amounts (torque reduction) depending on the engine load and engine speed. This smooths out the slight jerk as the gear engages.
- The signal is a square wave signal which is fed to contact 23 on the engine control unit.
- Because the signal is very brief the V.A.G. 1551 does not always recognise the command to retard the ignition timing.

Protected by copyright. Copyright by Volkswagen AG. Volkswagen AG does not guarantee or accept any liability with respect to the correctness of information in this document. Copyright by Volkswagen AG. Protected by copyright. Copyright by Volkswagen AG. Volkswagen AG. Volkswagen AG.

Special tools, workshop equipment, testers, measuring instruments and auxiliary items required

- Fault reader V.A.G 1551 or vehicle system tester V.A.G 1552 with cable V.A.G 1551/3A
- Test box V.A.G 1598/22
- Adapter set V.A.G 1594
- Hand multimeter V.A.G 1526 or multimeter V.A.G 1715
- Current flow diagram

Test conditions

- No faults must be stored in fault memory => Page 8 , interrogating and erasing fault memory.

Test sequence

Note:

To check the gearbox intervention signal the vehicle must be driven. To do this a second person is necessary.

Warning! Secure fault reader to rear seat and operate from this position.

Observe the valid safety precautions when carrying out a road test => Page 62 .

- Connect fault reader V.A.G 1551 (V.A.G 1552). Start engine and select "Address word" 01 of engine control unit. When doing this the engine must be running at idling speed.
  (Connecting fault reader and selecting engine control unit => Page 2 .)

-> Indicated on display:

```
Rapid data transfer      HELP
Select function XX
```

- Press keys 0 and 8 for the function "Read measured value block" and confirm entry with Q key.

-> Indicated on display:

```
Read measured value block      HELP
Input display group number XXX
```

- Press keys 0, 0 and 1 for "Display group number 1" and confirm entry with Q key.

-> Indicated on display:
(1...4 = Display zones)

```
Read measured value block      1
     1      2      3      4
```

- Carry out test drive with a 2nd person to observe display.
- Observe -8 digit number block- in display zone 4 :

  2nd position from left displays 0
  Display: 00000000 = No gearbox intervention
  2nd position from left displays 1
  Display: 01000000 = Gearbox intervention

Note:

When the gearbox control unit gives the command for the ignition timing to be retarded the readout will change briefly from "0" to "1".

- Press the ⇒key.
- Press keys 0 and 6 for the "End output" function and confirm input with the Q key.
- Switch off ignition.

satelettronica
Protected by copyright. Copying for private or commercial purposes, in part or in whole, is not permitted unless authorised by Volkswagen AG. Volkswagen AG does not guarantee or accept any liability with respect to the correctness of information in this document. Copyright by Volkswagen AG.

If the torque reduction is not displayed in measured value block during a gear shift or the fault code 00545 (in automatic gearbox control unit) is displayed:

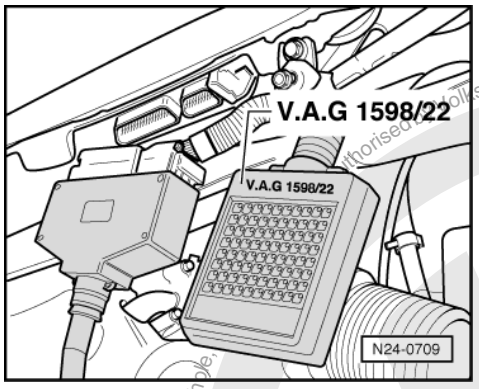

- -> Connect test box V.A.G 1598/22 to control unit wiring harness.
- Check the wiring from contact 23 on engine control unit to automatic gearbox control unit for open/short circuit:

=> Current flow diagrams, Electrical fault finding and Fitting locations

5.7 - Checking data bus

Function

The engine control unit communicates with all control units capable of data bus via a CAN data bus.

The control units capable of data bus are connected together via two data bus wires twisted together (CAN high and CAN low) and exchange information (messages). Information not available in the data bus will be recognised as a fault by the engine control unit as well as other CAN data bus control units.

Further information:

=> Self study programme No. 186 "The CAN data bus".

Test conditions

- A fault has been recognised by the CAN data bus self-diagnosis.

Special tools, workshop equipment, testers, measuring instruments and auxiliary items required

- Test box V.A.G 1598/22
- Hand multimeter V.A.G 1526 or multimeter V.A.G 1715
- Adapter set V.A.G 1594
- Current flow diagram

Test sequence

- Switch off ignition.
- Unlock the engine control unit connector and pull it off.
- Connect test box V.A.G 1598/22 to engine control unit. The control unit wiring harness is not connected by this action.
- Check centralized matching resistor in engine control unit.
- To do this perform a resistance measurement between the test box
  Sockets 29 + 41
  Specification: 60 ...72 ω

If the resistance measurement is outside the specified range:

- Renew engine control unit => Page 106 .

Protected by copyright. Copying for private or commercial purposes, in part or in whole, is not permitted unless authorised by Volkswagen AG. Volkswagen AG does not guarantee or accept any liability with respect to the correctness of information in this document.
satelettronica

If the resistance value is within the specified range:

- Rectify wiring fault using current flow diagram:

=> Current flow diagrams, Electrical fault finding and Fitting locations binder

Protected by copyright. Copying for private or commercial purposes, in part or in whole, is not permitted unless authorised by Volkswagen AG. Volkswagen AG does not guarantee or accept any liability with respect to the correctness of information in this document. Copyright by Volkswagen AG.

satelettronica

28 - Ignition system

1 - Servicing ignition system

1.1 - Servicing ignition system

1.2 - General notes on ignition system

- Only the components which specifically relate to the ignition system are dealt with here. For the other components of the injection and ignition system => Repair group 24.
- Disconnecting and connecting the battery must only be done with the ignition switched off, otherwise the engine control unit could be damaged.
- The engine control unit is equipped with self diagnosis.
- Components marked with * are checked via the self diagnosis
  => Page 8 , interrogating and erasing fault memory.
- For trouble-free operation of the electrical components a voltage of at least 11.5 V is necessary.
- Before carrying out repairs and for fault finding, interrogate fault memory => Page 8 , interrogating and erasing fault memory
- During some checks it is possible that the control unit will recognise and store a fault. Therefore after completing all checks and repairs the fault memory must be interrogated and if necessary erased.
  => Page 8 , interrogating and erasing fault memory

- If the engine starts, runs for a short period and then stops, after fault finding, repairs or component tests, then the fault may lie with the immobilizer which is blocking the engine control unit. The fault memory must be interrogated and if necessary the control unit matched => Page 109 .

Safety precautions => Page 122

Test data, spark plugs => Page 123

Protected by copyright. Copying for private or commercial purposes, in part or in whole, is not permitted unless authorised by Volkswagen AG. Volkswagen AG does not guarantee or accept any liability with respect to the correctness of information in this document. Copyright by Volkswagen AG.

satelettronica

1.3 - Removing and installing parts of the ignition system

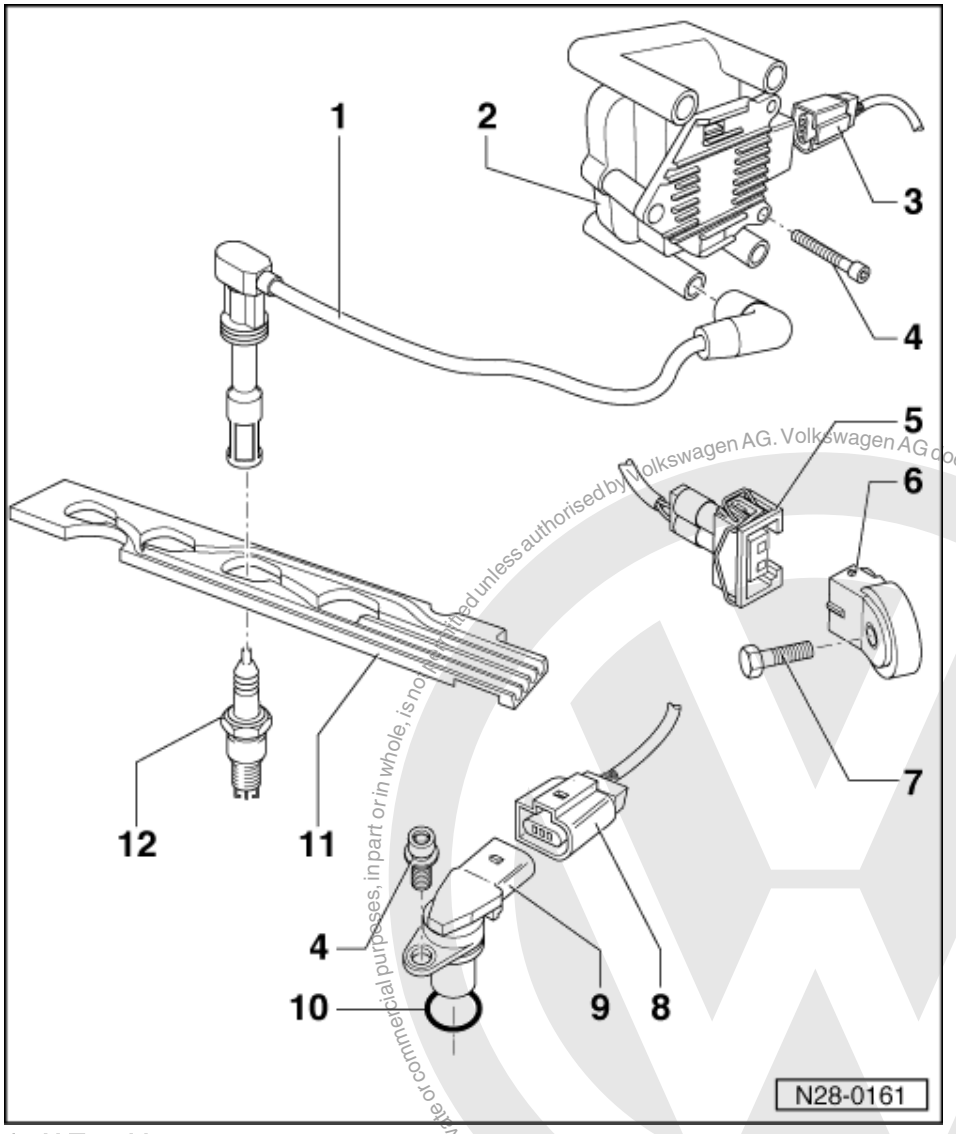

1 H.T. cable
- With suppression connector and spark plug connector
- Resistance 4.8...7.2 kω

2 Ignition transformer (N152)
- Marked for H.T. cables:
  A = Cylinder 1
  B = Cylinder 2
  C = Cylinder 3
  D = Cylinder 4
- Checking => Page 125
- Fitting location => Page 38 , engine compartment overview

3 Connector
- Black, 4 pin
- For ignition transformer (N152)

Protected by copyright. Copyright by Volkswagen AG. Volkswagen AG does not guarantee or accept any liability with respect to the correctness of information in this document. Copyright by Volkswagen AG. Copying for private or commercial purposes, in part or in whole, is not permitted unless authorised by Volkswagen AG.
satelettronica

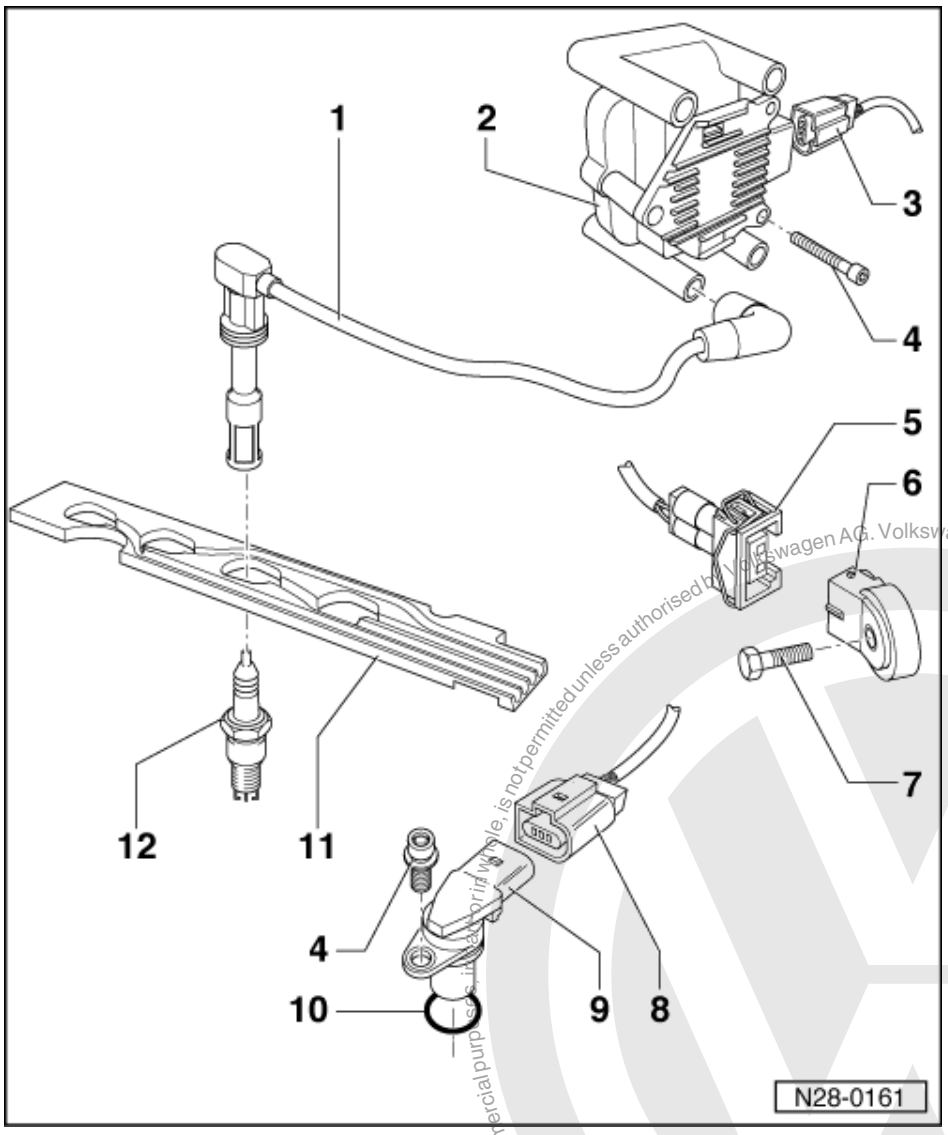

4 10 Nm

5 Connector
- Black, 2-pin
- For knock sensor 1 (G61)
- Connector contacts are gold-plated

6 Knock sensor 1 (G61)*
- Checking => Page 129
- Fitting location => Page 38 , engine compartment overview
- Connector contacts are gold-plated

7 20 Nm
- Tightening torque influences the function of the knock sensor

Protected by copyright. Copying for private or commercial purposes, in part or in whole, is not permitted unless authorised by Volkswagen AG. Volkswagen AG does not guarantee or accept any liability with respect to the correctness of information in this document. Copyright by Volkswagen AG.
satelettronica

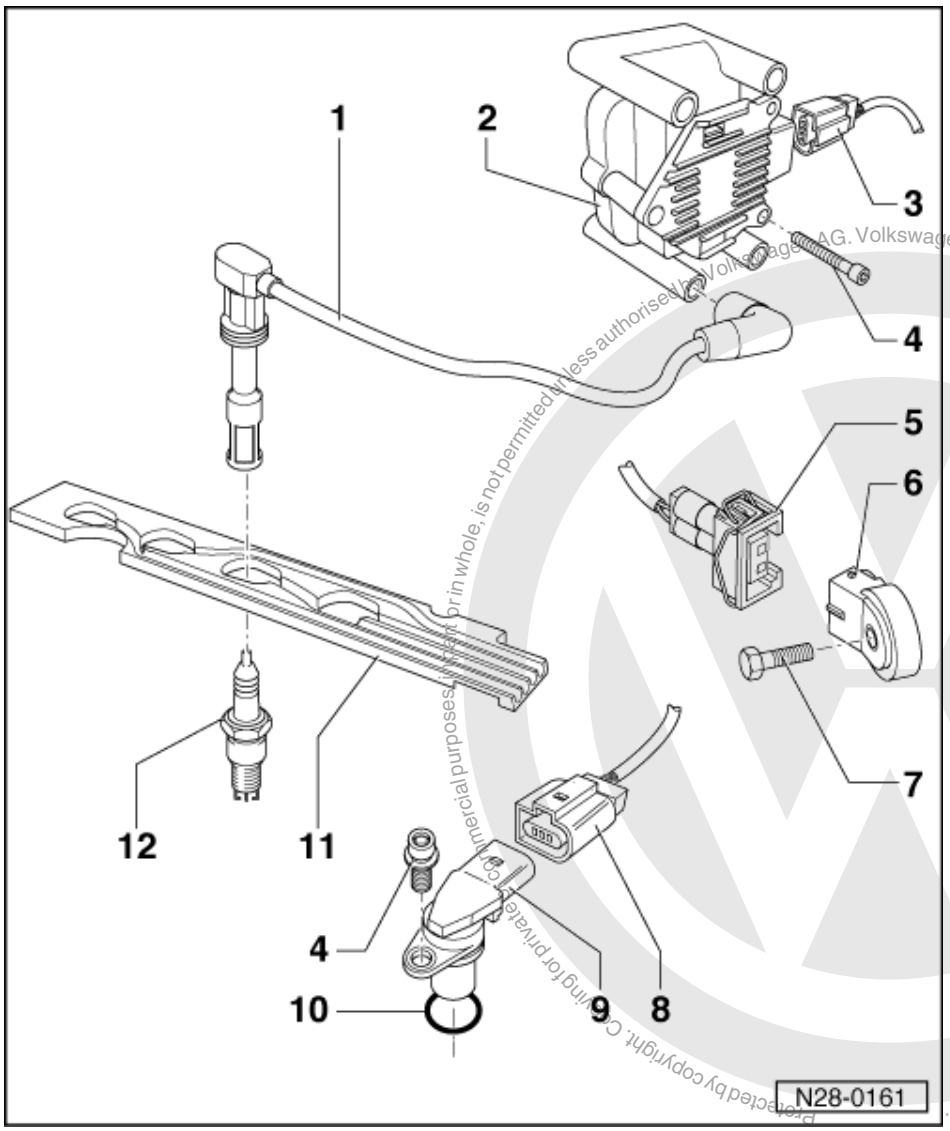

Protected by copyright. Copying for private or commercial purposes, in part or in whole, is not permitted unless authorised by Volkswagen AG. Volkswagen AG does not guarantee or accept any liability with respect to the correctness of information in this document. Copyright by Volkswagen AG.

satelettronica

8 Connector
- Black, 3-pin
- Hall sender (G40)

9 Hall sender (G40)*
- Checking => Page 124
- Fitting location => Page 38 , engine compartment overview

10 O ring
- Renew if damaged

11 H.T. cable guide

12 Spark plug, 30 Nm
- Remove and install with spark plug spanner 3122B
- Type and electrode gap
  => Page 123 , test data, spark plugs

1.4 - Safety precautions

To prevent injuries to persons and/or damage to the fuel injection and ignition system, the following must be noted:

- Do not touch or disconnect ignition wiring when the engine is running or being turned at starter speed.
- The ignition must be switched off before connecting or disconnecting injection or ignition system wiring or tester cables.

Observe following if test and measuring instruments are required during a test drive:

- Test and measuring instruments must be secured to rear seat and operated by a 2nd person from this location.

  If test and measuring instruments are operated from front passenger's seat and the vehicle is involved in an accident, there is a possibility that the person sitting in this seat may receive serious injuries when the airbag is triggered.

- If the engine is to be turned at starter speed, without starting:

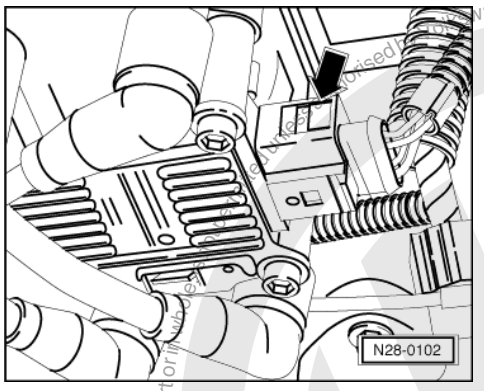

- -> Pull 4 pin connector off ignition transformer -arrow-.

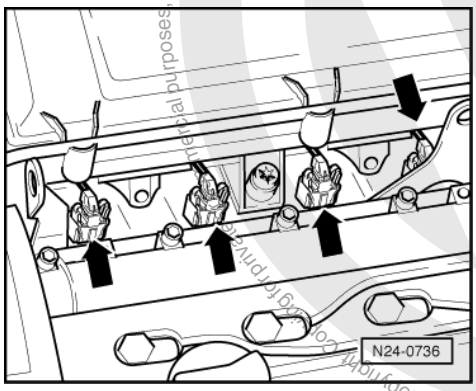

- -> Pull plug -arrows- off all injectors.

Protected by copyright. Copyright by Volkswagen AG. Volkswagen AG does not guarantee or accept any liability with respect to the correctness of information in this document. Copyright by Volkswagen AG.
satelettronica

1.5 - Test data, spark plugs

Code letters	AFK	AHW
Firing order	1-3-4-2	1-3-4-2
Spark plugs1) VW/Audi Manufacturer's designation	 101 000 033 AA NGK BKUR 6 ET-10	 101 000 033 AA NGK BKUR 6 ET-10
Electrode gap	0.9...1.1 mm	0.9...1.1 mm
Tightening torque	30 Nm	30 Nm

1) The up-to-date figures and the spark plug change intervals:

=> Exhaust emissions test binder

1.6 - Checking Hall sender

Special tools, workshop equipment, testers, measuring instruments and auxiliary items required

- Test box V.A.G 1598/22
- Hand multimeter V.A.G 1526 or multimeter V.A.G 1715
- Adapter set V.A.G 1594
- Current flow diagram

Test conditions

- The battery voltage must be at least 11.5 V.

Test sequence

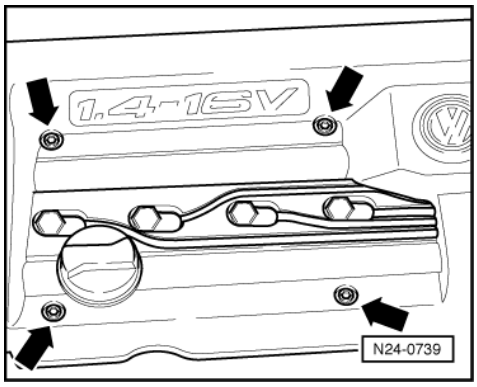

- -> Remove cover above camshaft housing -arrows-.

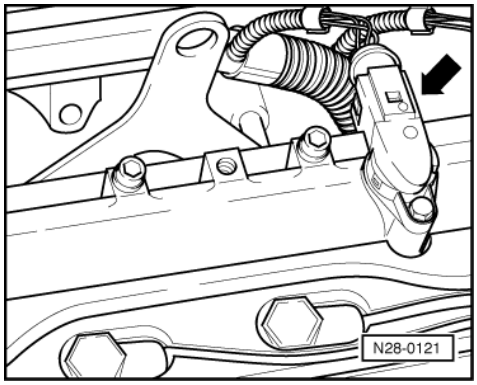

- -> Pull 3-pin connector off Hall sender -arrow-.

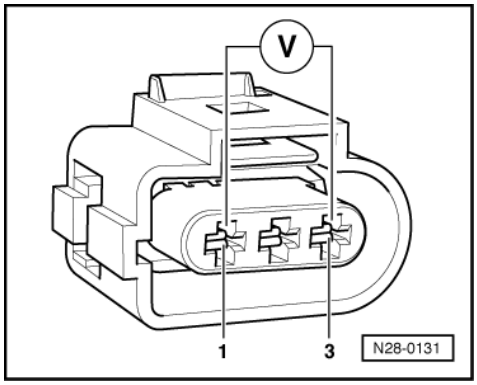

- -> Connect multimeter to measure voltage with adapter cables from V.A.G 1594 to contacts 1 (positive) and 3 (earth) on the Hall sender connector.
- Switch on ignition.
  Specification: min. 4.5 V

Protected by copyright. Copying for private or commercial purposes, in part or in whole, is not permitted unless authorised by Volkswagen AG. Volkswagen AG does not guarantee or accept any liability with respect to the correctness of information in this document. Copyright by Volkswagen AG.
satelettronica

- Switch off ignition.

If no voltage is present:

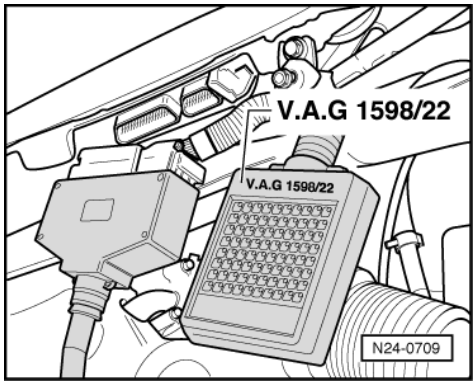

- -> Connect test box V.A.G 1598/22 to control unit wiring harness.

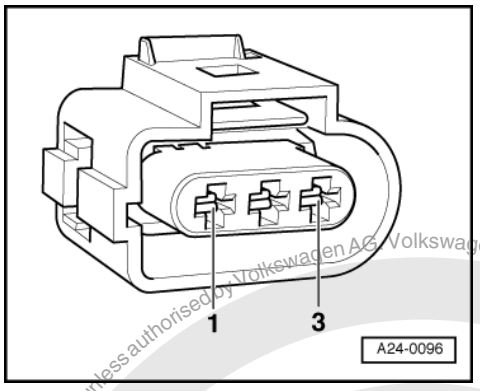

- -> Check wiring between test box and 3 pin connector for open circuit using current flow diagram.
  Contact 1+socket 64
  Contact 2+socket 76
  Contact 3+socket 67
  Wire resistance: Max. 1.5 ω
  Additionally check wires for short to one another.
  Specification: ∞ω

If no wiring fault is detected and voltage was present between contacts 1+3:

- Renew Hall sender (G40)
  => Page 122 , item 9 .

If no wiring fault is detected and no voltage was present between contacts 1+3:

- Replace engine control unit
  => Page 106 .

1.7 - Checking ignition transformer

Special tools, workshop equipment, testers, measuring instruments and auxiliary items required

- Test box V.A.G 1598/22
- Hand multimeter V.A.G 1526 or multimeter V.A.G 1715
- Adapter set V.A.G 1594
- Diode test lamp V.A.G 1527
- Current flow diagram

satelettronica

Check conditions

- The battery voltage must be at least 11.5 V.
- Hall sender must be OK, checking
  =>Page 124 .
- Engine speed sender must be OK, checking Page 86 .

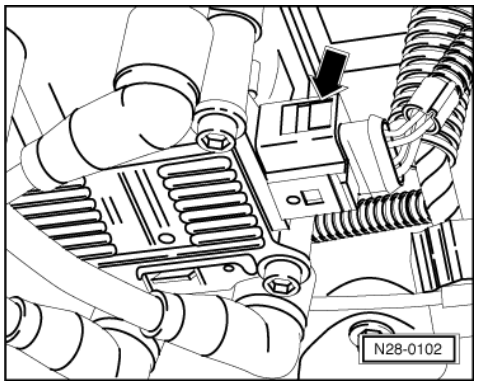

Test sequence

- -> Pull 4 pin connector off ignition transformer -arrow-.

Checking voltage supply

Test conditions

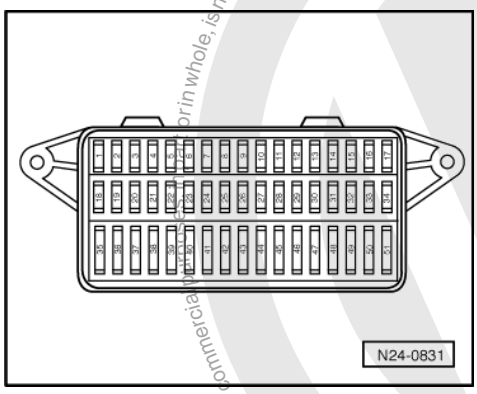

- -> Fuse No. 34 must be OK.

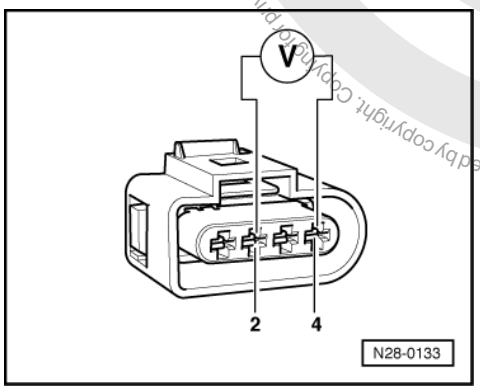

- -> Using multimeter and adapter cables from V.A.G 1594 measure the supply voltage between contacts 2 +4 of disconnected connector.
- Switch on ignition.
  Specification: min. 11.5 V

Protected by copyright. Copyright by Volkswagen AG.
Copyright by Volkswagen AG. Volkswagen AG does not guarantee or accept any liability with respect to the correctness of information in this document.
or in whole, is not permitted unless authorised by Volkswagen AG.
commercial use or distribution of the data.
satelettronica

- Switch off ignition.

If no voltage is present:

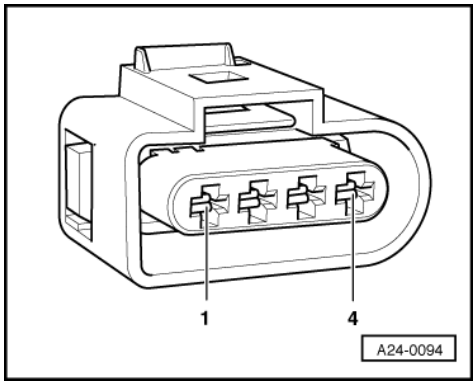

- -> Check wire between 4 pin connector contact 2 and relay plate for open circuit according to current flow diagram.
  Wire resistance: max. 1.5 ω
- Check wire between 4 pin connector contact 4 and earth for open circuit according to current flow diagram.
  Wire resistance: max. 1.5 ω

Checking activation

Warning! During the following test do not touch the terminals of the ignition transformer or test cables.

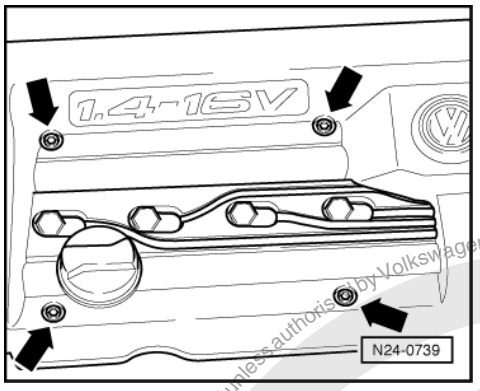

- -> Remove cover above camshaft housing -arrows-.

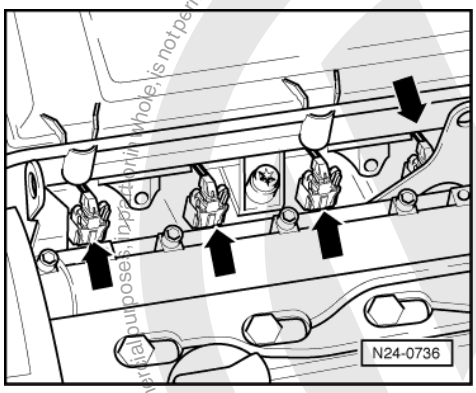

- -> Pull plug -arrows- off all injectors.

satelettronica
Protected by copyright. Copying for private or commercial purposes, in part or in whole, is not permitted unless authorised by Volkswagen AG. Volkswagen AG does not guarantee or accept any liability with respect to the correctness of information in this document. Copyright by Volkswagen AG.

Protected by copyright. Copying for private or commercial purposes, in part or in whole, is not permitted unless authorised by Volkswagen AG. Volkswagen AG does not guarantee or accept any liability with respect to the correctness of information in this document. Copyright by Volkswagen AG.

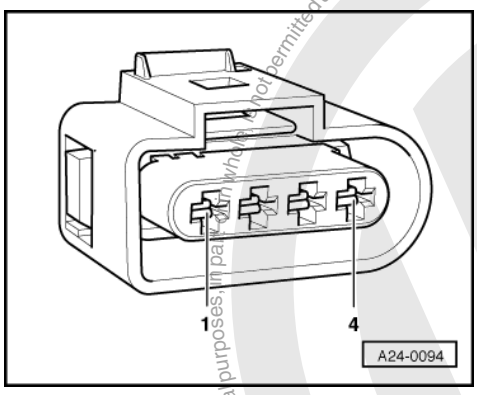

- -> Connect diode test lamp V.A.G 1527 with adapter cables from V.A.G 1594 to
  contacts 1 + 4 (ignition output 1),
  contacts 3 + 4 (ignition output 2)
  of disconnected connector.
- Operate starter and check the ignition signal from engine control unit.
  The LED must flicker
- Switch off ignition.

If the LED flickers and there is voltage between contacts 2 + 4:

- Replace ignition transformer (N152)
  => Page 120 , item 2 .

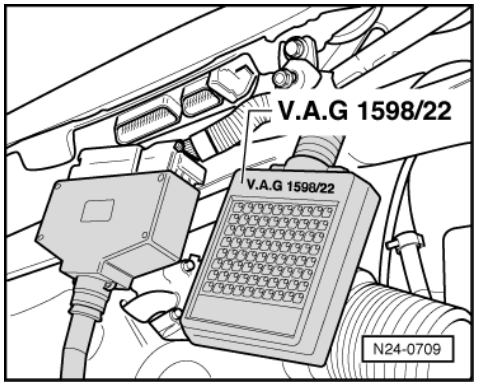

The LED does not flicker:

- Check wiring => Page 128

Checking wiring

- -> Connect test box V.A.G 1598/22 to control unit wiring harness.

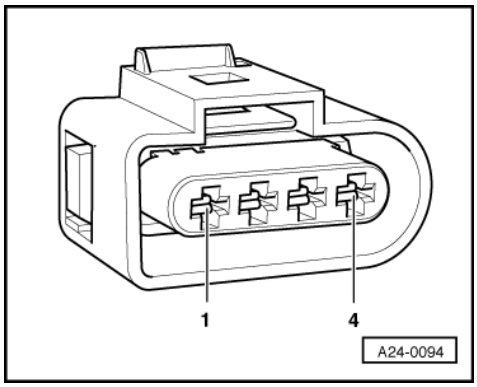

- -> Check wiring between test box and 4 pin connector for open circuit according to current flow diagram.
  Contact 1+socket 71
  Contact 3+socket 78

satelettronica

Wire resistance: Max. 1.5 ω
- Additionally check wires for short to one another.
  Specification: ∞ω

If no wiring fault is detected and voltage was present between contacts 2+4:

- Replace engine control unit
  => Page 106 .

Checking secondary resistance

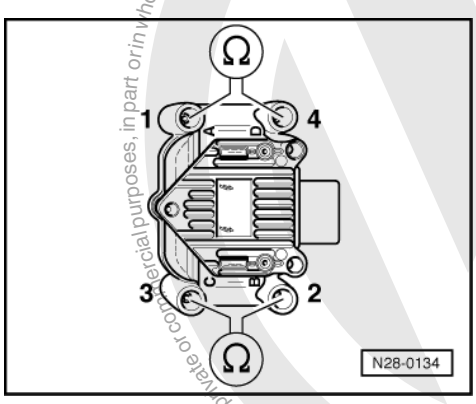

- -> Check the secondary winding on terminal 4 between
  Cyl. 1+Cyl. 4,
  Cyl. 2+Cyl. 3.
  Specification: 4.0... 6.0 kω (at 20 °C)

If the specifications are not attained:

- Replace ignition transformer (N152)
  => Page 120 , item 2 .

1.8 - Checking knock sensor

Notes:

- It is extremely important to keep to the tightening torque of 20 Nm to ensure the knock sensors perform perfectly.
- Only gold-plated contacts may be used when servicing the knock sensor connector contacts.

Special tools, workshop equipment, testers, measuring instruments and auxiliary items required

- Test box V.A.G 1598/22
- Hand multimeter V.A.G 1526 or multimeter V.A.G 1715
- Adapter set V.A.G 1594
- Current flow diagram

Test conditions

- Knock sensor fault recognised by self-diagnosis =>Page 8 , interrogating and erasing fault memory.

Protected by copyright. Copyright by Volkswagen AG. Volkswagen AG does not guarantee or accept any liability with respect to the correctness of information in this document. Copyright by Volkswagen AG. Copying for private or commercial purposes, in part or in whole, is not permitted unless authorised by Volkswagen AG.
satelettronica

Test sequence

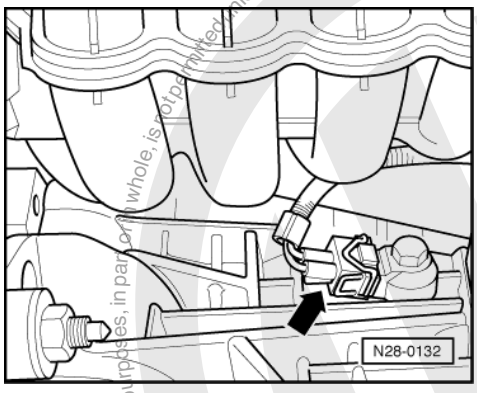

- -> Pull 2 pin connector off knock sensor -arrow-.

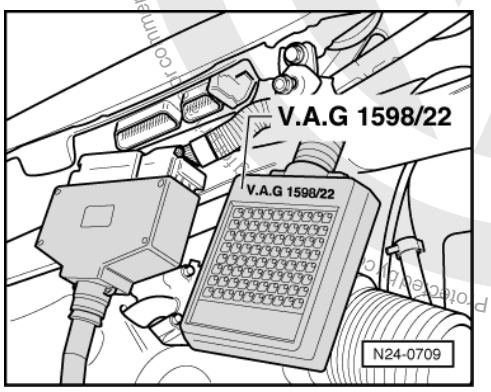

- -> Connect test box V.A.G 1598/22 to control unit wiring harness.

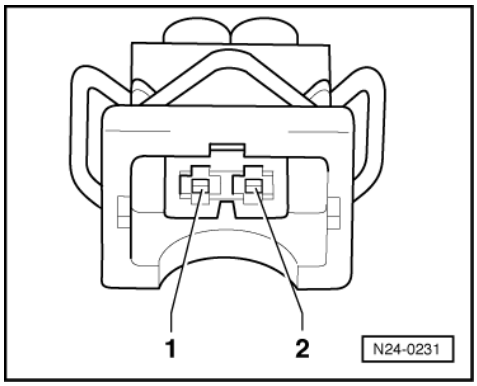

- -> Check wiring between test box and 2 pin connector for open circuit using current flow diagram.
  Contact 1+socket 68
  Contact 2+socket 60
  Wire resistance: Max. 1.5ω
- Additionally check wires for short to one another.
  Specification: ∞ω

If no wiring fault is detected:

- Loosen knock sensor and tighten again to 20 Nm.
- Carry out test drive.

Observe the valid safety precautions when carrying out a test drive => Page 122 .

During the road test the following operating conditions must be fulfilled:

- The coolant temperature must exceed 80 °C .
- When the temperature is reached, the operating conditions
  Idling
  Part throttle

Copyright by Volkswagen AG. Volkswagen AG does not guarantee or accept any liability with respect to the correctness of information in this document. Copyright by Volkswagen AG. Protected by copyright. Commercial use or distribution, in part or in whole, is not permitted unless authorised by Volkswagen AG.
satelettronica

Full throttle
Overrun
must be attained several times.
- At full throttle the speed must exceed 3500 rpm.

- Again interrogate the control unit fault memory.

If the fault is still present:

- Replace knock sensor (G61) =>Page 121 , item 6 .

Protected by copyright. Copying for private or commercial purposes, in part or in whole, is not permitted unless authorised by Volkswagen AG. Volkswagen AG does not guarantee or accept any liability with respect to the correctness of information in this document. Copyright by Volkswagen AG.

satelettronica